Visio L 2 Right - Without frame

2246557
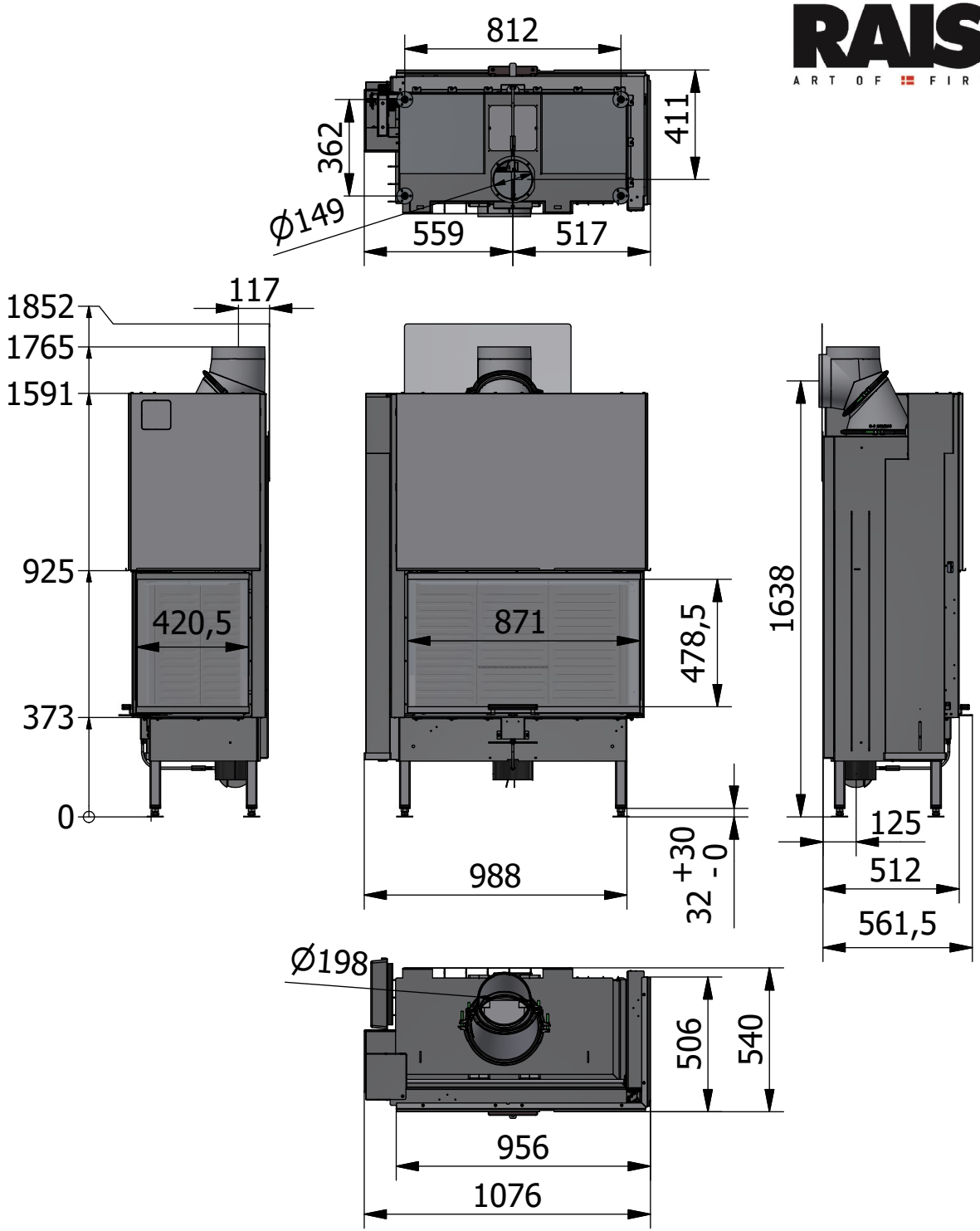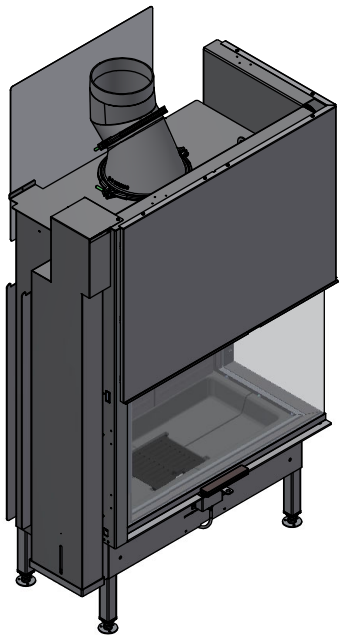
01-12-2025