BRUGERMANUAL
BEDIENUNGSANLEITUNG
USER MANUAL
MANUEL D'UTILISATEUR
BRUKERVEILEDNING
BRUKSANVISNING
KÄYTTÖOHJE
GEBRUIKERSHANDLEIDING

VISIO 1
VISIO 2
VISIO 3

attika®
FEUERKULTUR

RAIS®
ART OF FIRE

RAIS/attika VISIO

Mærkeplade/CE Zeichen/Manufacturer's plate/Plaque signalétique/Merkeplate/Märkplät

14

EN 13229:2001+A1:2003+A2:2004,
EC.NO: 124
Notified Body: 1235

Produced at:
RAIS A/S, Industrivej 20, 9900 Frederikshavn, Danmark

Visio 1 / Visio 2 / Visio 3

Anordningen må kun installeres i forbindelse med ubrændbart materiale.

AFSTAND TIL BRÆNDBART, BAGVÆG ABSTAND ZU BRENNBAREN BAUTEILEN, HINTEN DISTANCE TO COMBUSTIBLE BACK WALL DIST. ENTRE COMPOSANTS COMBUSTIBLES, ARRIÈRE	DK: mm SE BRUGERVEJLEDNING DE: mm SIEHE BEDIENUNGSANLEITUNG UK: mm SEE USER MANUAL FR: mm CONSULTEZ LE GUIDE DE L'UTILISATEUR
AFSTAND TIL BRÆNDBART, SIDEVÆG ABSTAND ZU BRENNBAREN BAUTEILEN, SEITE DISTANCE TO COMBUSTIBLE SIDE WALL DISTANCE ENTRE COMPOSANTS COMBUSTIBLES, COTÉ	DK: mm SE BRUGERVEJLEDNING DE: mm SIEHE BEDIENUNGSANLEITUNG UK: mm SEE USER MANUAL FR: mm CONSULTEZ LE GUIDE DE L'UTILISATEUR
AFSTAND TIL BRÆNDBART, MØBLERING ABSTAND VORNE ZU BRENNBAREN MÖBELN DISTANCE TO FURNITURE AT THE FRONT DISTANCE ENTRE COMPOSANTS COMBUSTIBLES, DEVANT	DK: Visio 1: 1400mm - Visio 2/Visio 3: 1200mm DE: Visio 1: 1400mm - Visio 2/Visio 3: 1200mm UK: Visio 1: 1400mm - Visio 2/Visio 3: 1200mm FR: Visio 1: 1400mm - Visio 2/Visio 3: 1200mm
CO EMISSION (REL. 13% O2) CO EMISSION IN DEN VERBRENNUNGSPRODUKTEN (BEI 13%O2) EMISSION OF CO IN COMBUSTION PRODUCTS (AT 13%O2) EMISSION CO DANS LES PRODUITS COMBUSTIBLES (À 13%O2)	0,092 % / 1150 mg/Nm³
STØV / STAUB / DUST / POUSSIÈRES:	5 mg/Nm³
RØGGASTEMPERATUR / ABGASTEMPERATUR / FLUE GAS TEMPERATURE / TEMPÉRATURE DES GAZ DE FUMÉE:	243 °C
NOMINEL EFFEKT / HEIZLEISTUNG / THERMAL OUTPUT / PUISSANCE CALORIFIQUE:	7,9 kW (UK: 7,0 kW)
VIRKNINGSGRAD / ENERGIEEFFIZIENZ / ENERGY EFFIENCY /EFFICACITÉ ÉNERGÉTIQUE:	80 %

DK: Brug kun anbefalede brændsler. Følg instrukserne i bruger manualen. Anordningen er egnet til røggassamleledning og intervalfyring.
DE: Lesen und befolgen Sie die Bedienungsanleitung. Zeitbrandfeuerstätte. Nur empfohlene Brennstoffe einsetzen.
UK: Fuel types (only recommended). Follow the installation and operating instruction manual. Intermittent operation.
F: Veuillez lire et observer les instructions du mode d'emploi. Foyer à durèe de combustion limitèe, homologué pour cheminée à connexions multiples. Utiliser seulement les combustibles recommandés.

DK: BRÆNDE
DE: HOLZ
UK: WOOD
FR: BOIS

Not to be used in a shared flue

Raumheizer für feste Brennstoffe
Appliance fired by wood
Poêle pour combustibles solides

15a B-VG

Typ FCxxxFCxxx

Produced for:
ATTIKA FEUER AG, Brunnmatt 16, CH-6330 Cham /
RAIS A/S, Industrivej 20, DK-9900 Frederikshavn

Reference / DTI test report:
300-ELAB-2080-EN
300-ELAB-2080-NS
300-ELAB-2080-AEA

VISIO 1

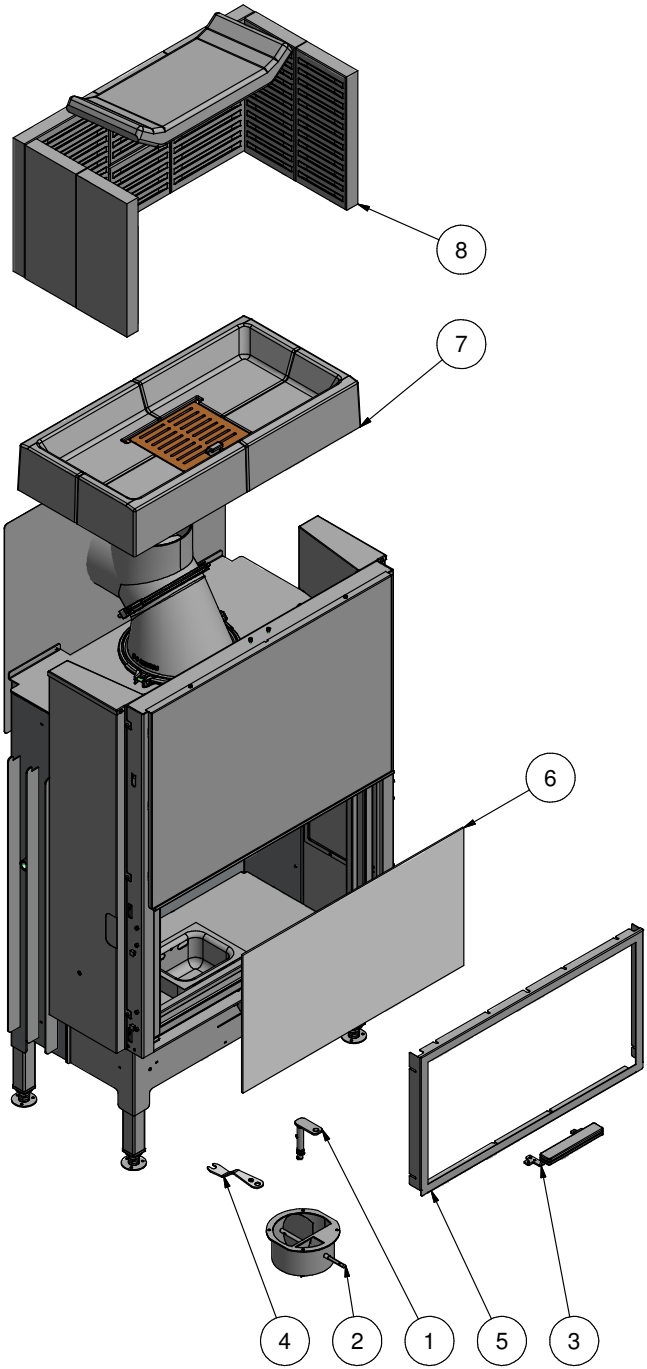

VISIO 2

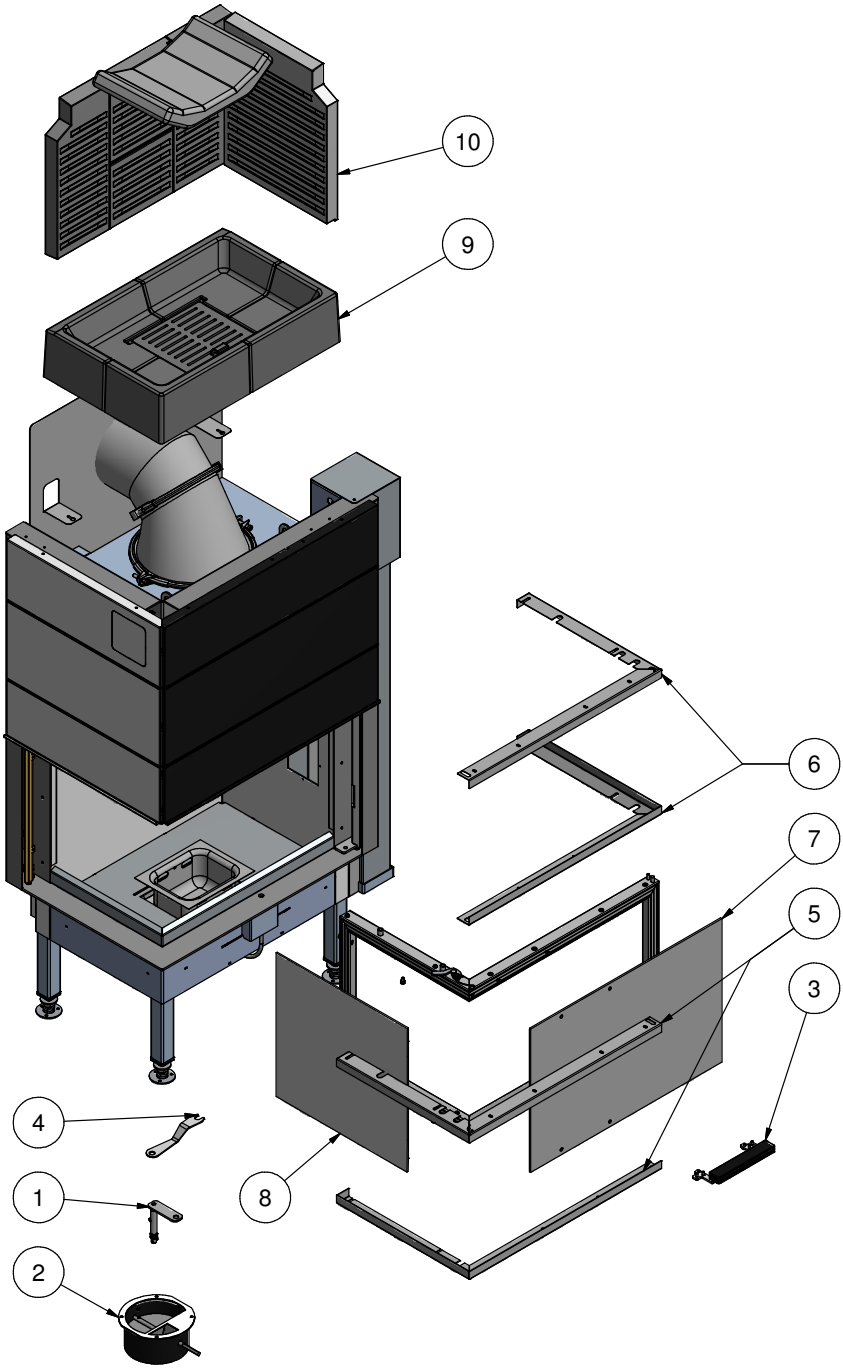

VISIO 3

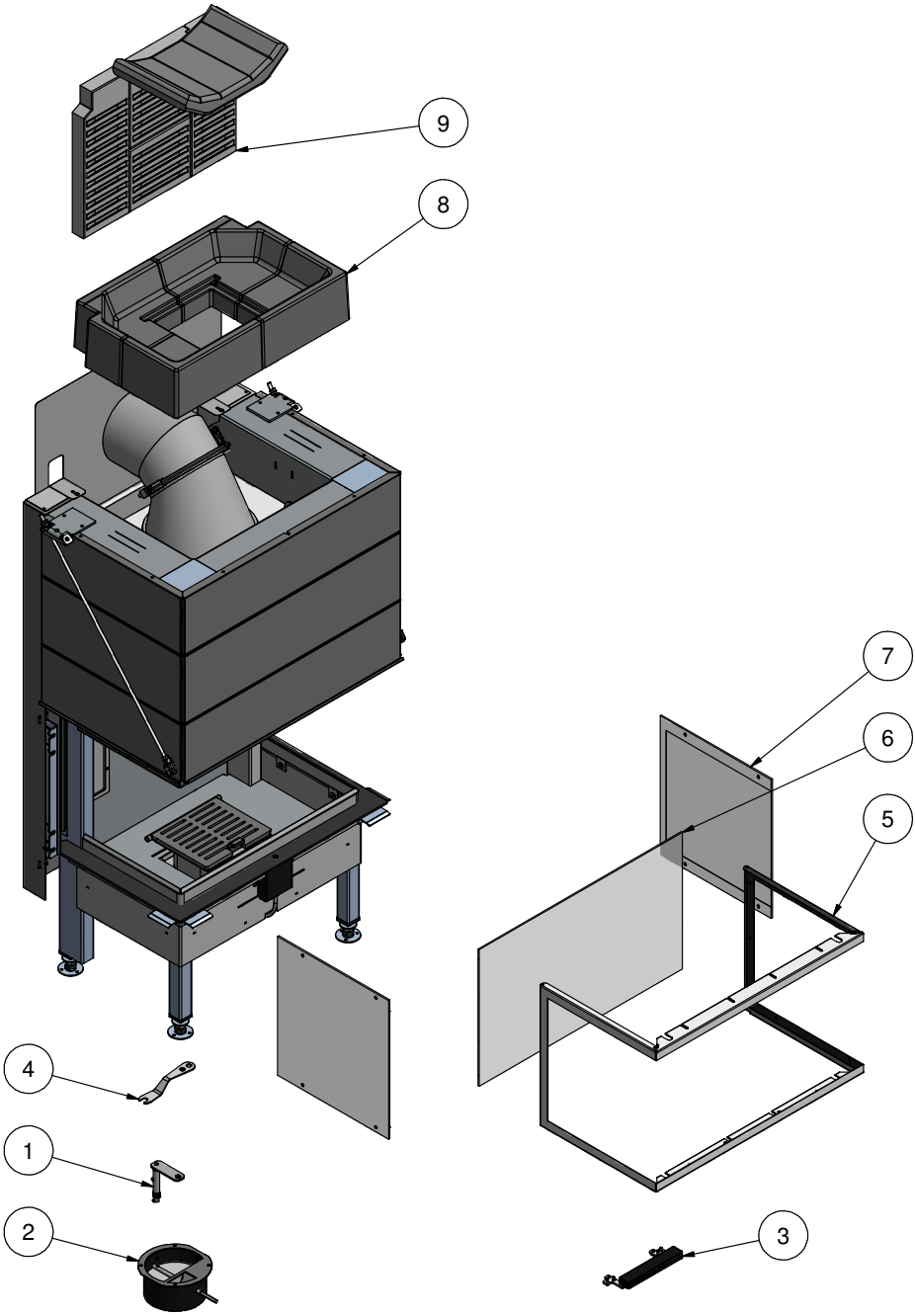

Indstilling af spjæld / Einstellung der Luftklappe / Adjustment of the air damper / Réglage du volet d'air / Innstilling av spjeldet / Inställning av spjället

Position 1 - Posisjion 1

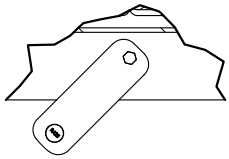

Position 2 - Posisjion 2

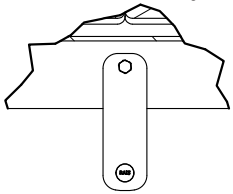

Position 3 - Posisjion 3

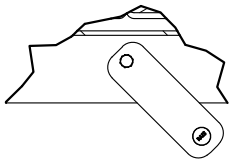

Optænding og påfyldning / Anzünden und Nachlegen / Lighting and fuelling / Allumage et remplissage / Opptenning og påfylling / Upptänding och påfyllning

1

2

3

4

5

6

7

8

FIRE ENVIRONMENTALLY FRIENDLY!

5 Eco-friendly advices for sensible heating
- common sense both environmentally and economically.

1. Effective lighting. Use small pieces of wood (fir tree) and a suitable fire lighter, for example paraffined wood wool/saw-dust. Open the air damper, so plenty of air is fed to the stove and the gases from the heated wood can burn rapidly.

2. Light the fire with only little wood at a time - this gives the best combustion. Remember plenty of air for every time new wood is added.

3. When the flames are diminished, adjust the air damper so that the air supply is reduced.

4. When only glowing embers remain, air flow can be reduced further, so heating demand is just covered. With a lower air supply the charcoal will burn slower and the heat loss through the chimney is reduced.

5. Use only dry wood - ie. wood with a humidity of 15 to 20%.

RECYCLING:
The oven is wrapped in packaging that is recyclable. This must be disposed of according to national rules regarding the disposal of waste.

The glass can <u>not</u> be reused.
The glass should be discarded along with the residual waste from ceramics and porcelain.
Pyrex glass has a higher melting temperature and therefore can not be reused.

If discarded you make an important positive contribution to the environment.

We cannot be held responsible for any misprints.

VISIO

Revision: 18
Date : 01-08-2024

INTRODUCTION 9
WARRANTY 10
SPECIFICATIONS 11
DISTANCES 12
CONVECTION 17
MATERIAL SELECTION 17
CHIMNEY 18
INSTALLATION INSTRUCTIONS 20
INSTALLATION 21
INSTALLATION DISTANCES 21
MOUNTING THE REFLEKTOR PLATE 22
REMOVING THE TRANSPORT SAFETY 23
VISIO 1 - BUILT-IN DIMENSIONS 24
VISIO 1 - INSTALLATION DISTANCES 29
VISIO 2 - BUILT-IN DIMENSIONS 35
VISIO 2 - INSTALLATION DISTANCES 40
VISIO 3 - BUILT-IN DIMENSIONS 46
VISIO 3 - INSTALLATION DISTANCES 48
AIR-SYSTEM 54
FOR THE INSTALLER 54
FUEL 55
DRYING AND STORAGE 56
REGULATING THE COMBUSTION AIR 56
ROOM VENTILATION 56
USING THE WOOD BURNING STOVE 57
FIRST USAGE 57
LIGHTING AND FUELLING 58
CONTROL 59
WARNING 60
CLEANING AND CARE 61
CLEANING THE DOOR GLASS - VISIO 1 62
CLEANING THE DOOR GLASS - VISIO 2 63
CLEANING THE DOOR GLASS - VISIO 3 64
CLEANING THE COMBUSTION CHAMBER 65
CLEANING OF FLUE WAYS 65
INTERRUPTION OF OPERATION 66
CONVERSION TO SELV CLOSING DOOR 68
ACCESSORIES 70
SPARE PARTS VISIO 1 72
SPARE PARTS VISIO 2 & 3 73
DECLARATION OF PERFORMANCE 74

Introduction

Thank you for purchasing a RAIS/attika wood burning stove.

A RAIS/attika wood burning stove is more than just a heat source. It also shows that you care about design and quality in your home.

To make the most of your wood burning stove it is important that you read the manual thoroughly, before installing and using it.

In the case of warranty coverage, and for general queries regarding your wood burning stove, it is important that you know the stove's production number. We therefore recommend that you write down the number in the table below.

The production number is located on the side of the stove at the bottom.

Production number:

Produced by:
RAIS A/S
9900 Frederikshavn, DK

Date: Distributor:

WARRANTY

RAIS/attika – wood-burning stoves are tested repeatedly in terms of safety, as well as material and manufacturing quality. We grant warranty on all models, starting with the date of installation.

The warranty refers to:
- documented malfunctions due to faulty manufacture
- documented material defects

The warranty does not cover:
- door and glass seals
- ceramic glass
- chamber lining
- appearance of the surface structure or natural stone texture
- appearance or changes of colour of the stainless steel or patina surfaces
- expansion noise

The warranty is invalidated in case of:
- damages, caused by overfiring
- damages, caused by external influence and the use of unsuitable fuels
- non-observance of statutory or recommended installation guidelines, and modificatons to the wood-burning stove
- non-observance of service and care provisions

Please contact your retailer in the event of damage. We determine the way to repair the damage, in case of warranty claims. In the event of repair, we ensure proper and professional execution.

Warranty claims submitted for additionally delivered or repaired parts are subject to national/EU laws and regulations in terms of renewed warranty periods.

Please contact RAIS A/S for the applicable warranty provisions.

RAIS/attika VISIO are inset stoves with a vertically operated door.

VISIO 1 has a front glass
VISIO 2 has a front glass and a side glass either to the right or left.
VISIO 3 has a front glass and 2 side glasses.

Specifications

DTI ref.: 300-ELAB-2080-EN / 300-ELAB-2080-AEA	VISIO 1	VISIO 2	VISIO 3
Nominal output (kW):	7		
Min./Max. output (kW):	5 - 9		
Heating area (m^2):	75 - 120		
Stove's width/depth/height (mm):	867/550/1226	833/593/1617	759/564/1616
Combustion chamber's width/ depth/height (mm):	697/333/450	533/333/466	533/333/466
Recommended amount of wood when fuelling (kg). Distributed on 2-4 logs of wood of approx. 30 cm	1.5 - 2.5		
Min. uptake / Min. draught (Pascal):	-12		
Weight (kg):	approx 233		
Efficiency (%):	80		
CO-emission at 13% O_2 (%):	0.092		
NOx-emission at 13% O_2 (mg/Nm^3):	81		
Particles emission acc. to NS3058/3059 (g/kg):	6.507		
Dust measured acc. to Din+ (mg/ Nm^3):	5		
Smoke gas mass flow (g/s):	7.5		
Smoke gas temperature (°C):	243°		
Smoke gas temperature (°C) at flue collar:	292°		
Intermittent operation:		Refuelling should be undertaken within 49 minutes.	

DTI
Danish Technological Institute
Teknologiparken Kongsvang Allé 29, DK-8000 Aarhus C
Danmark
www.dti.dk
Telefon: +45 72 20 20 00
Fax: +45 72 20 10 19

DIstances

I: Distance from floor to center smoke top outlet
J: Distance from floor to center smoke back outlet
K: Distance from back side to air intake bottom (air system)
N: Distance from side to air intake bottom (air system)

Note that the stoves are fitted with a stepless flue collar.

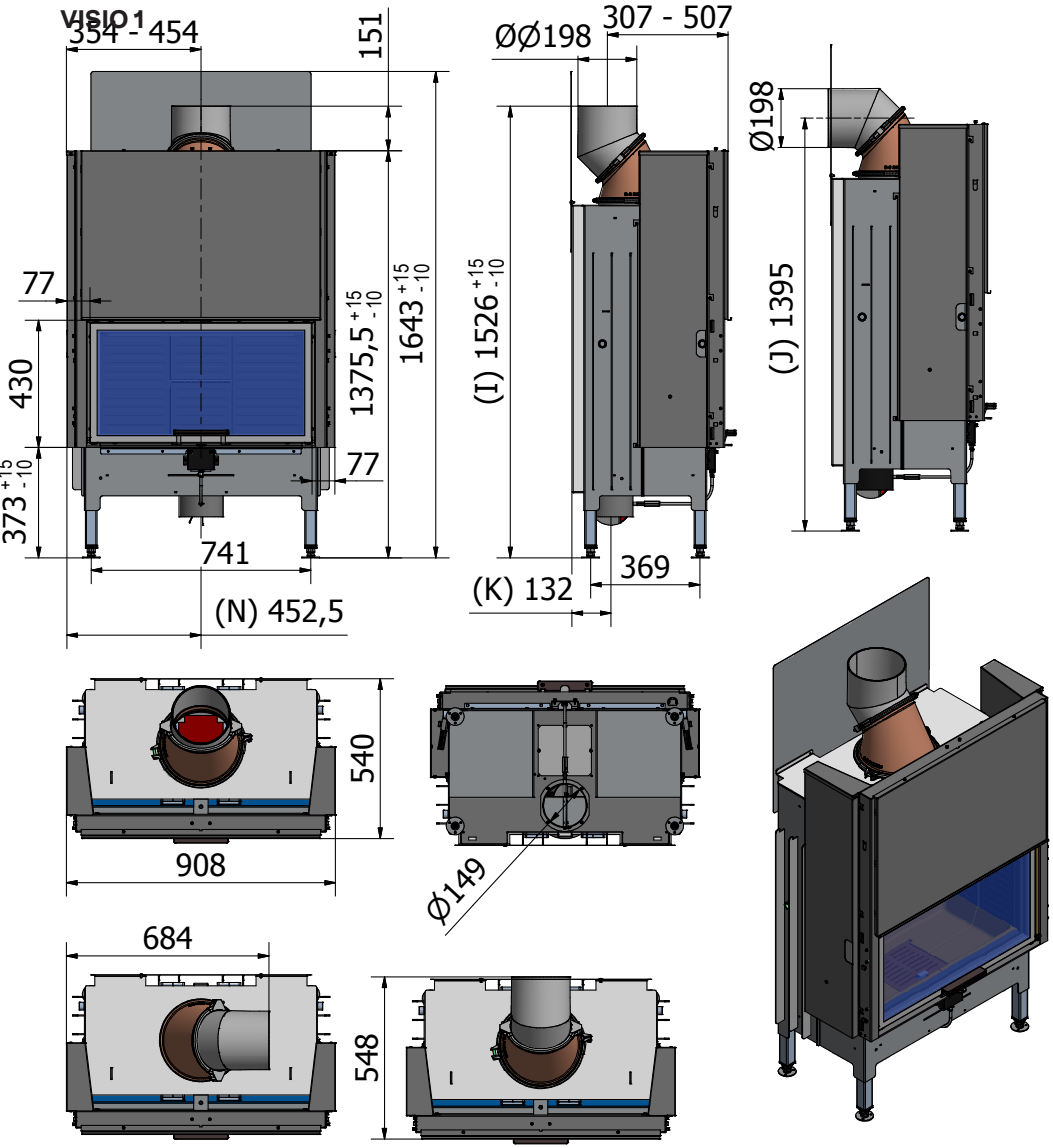

VISIO 2 with smoke top outlet

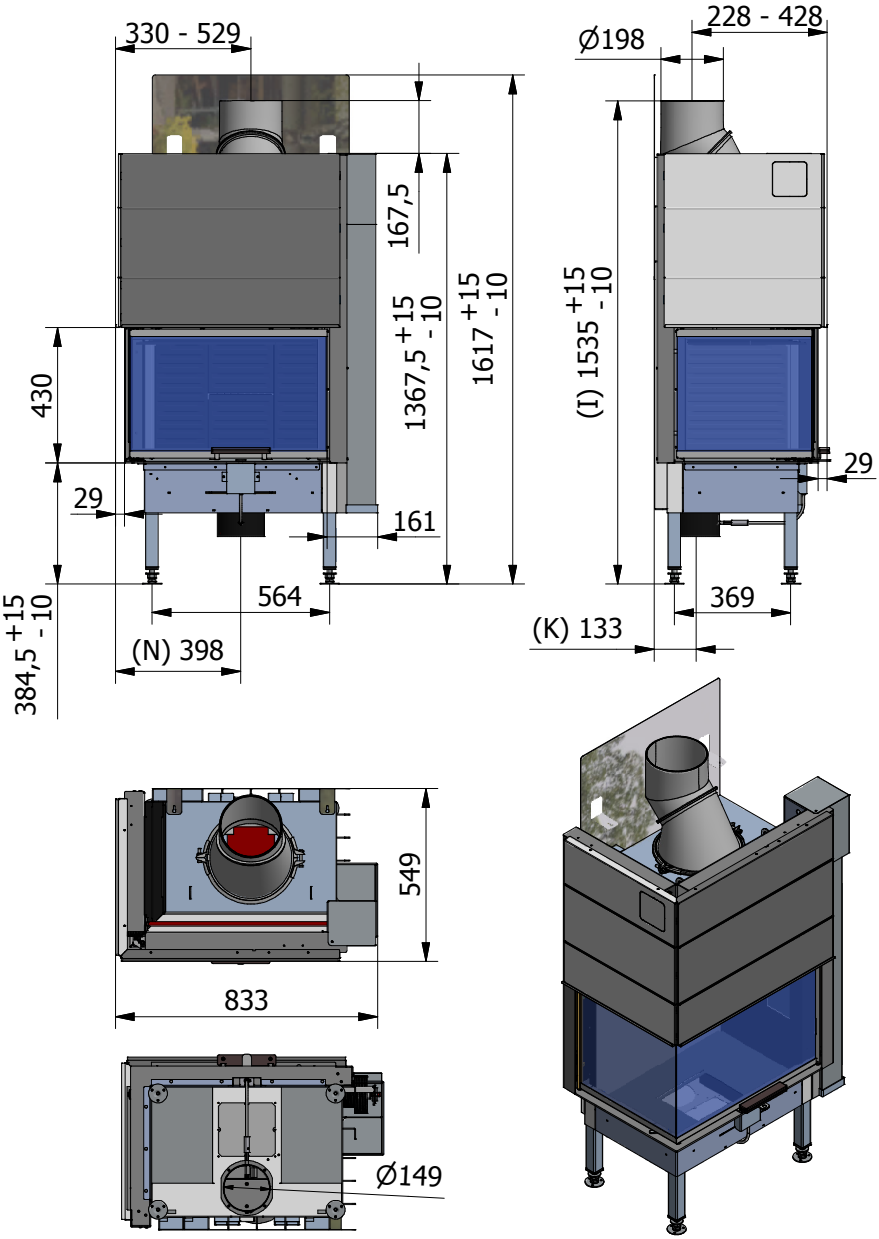

VISIO 2 with smoke back outlet

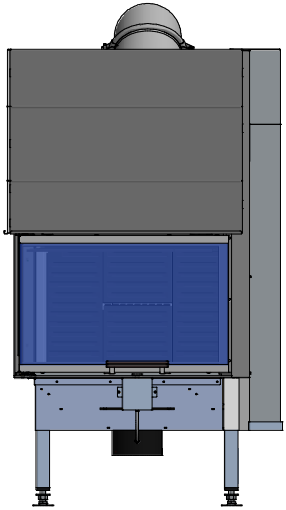

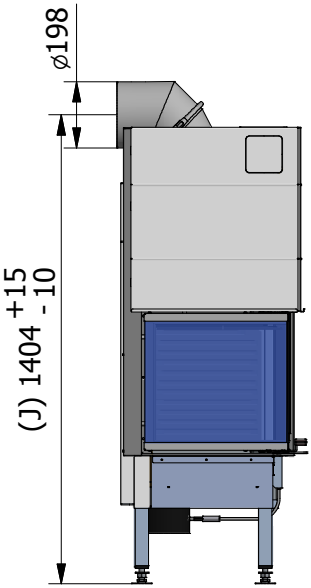

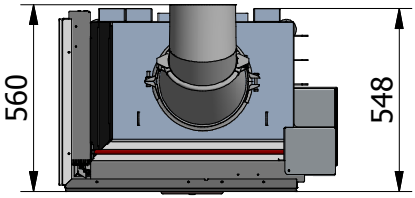

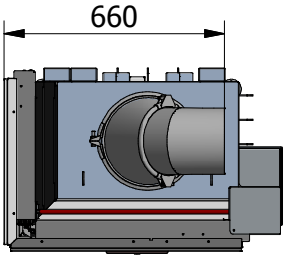

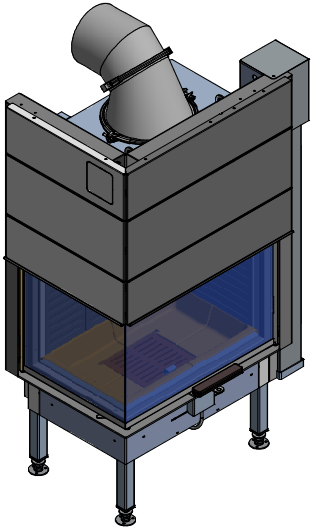

VISIO 3 with smoke top outlet

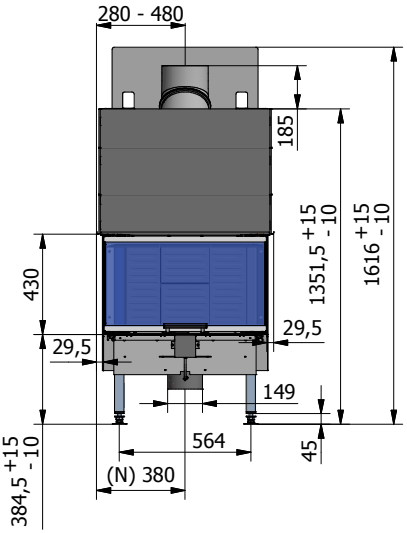

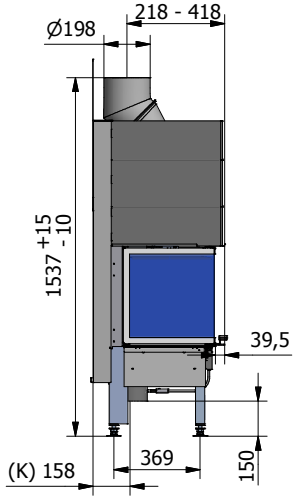

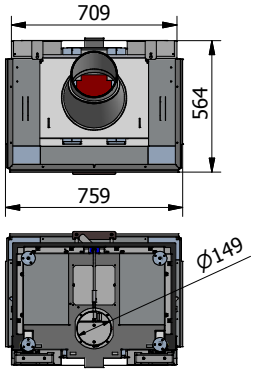

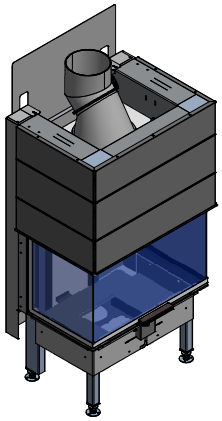

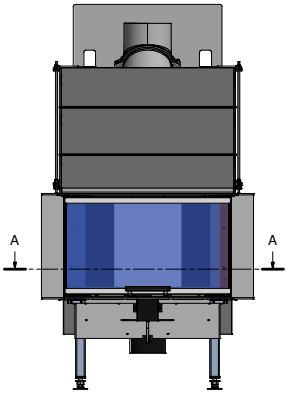

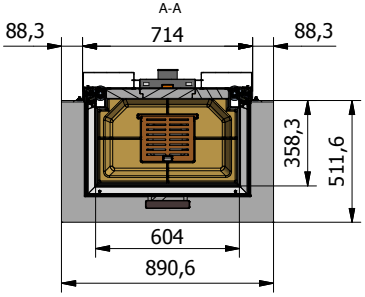

VISIO 3 with smoke back outlet

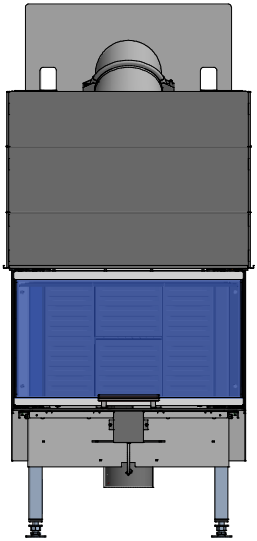

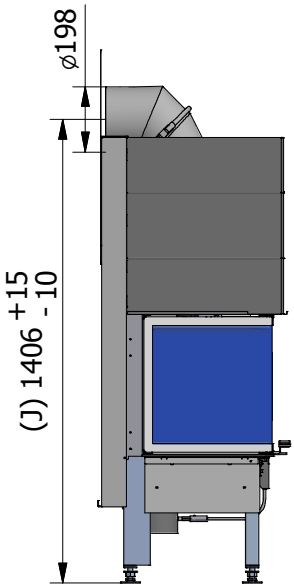

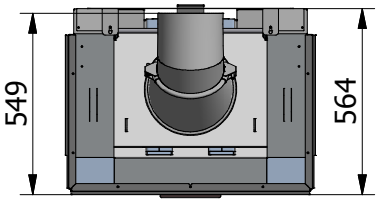

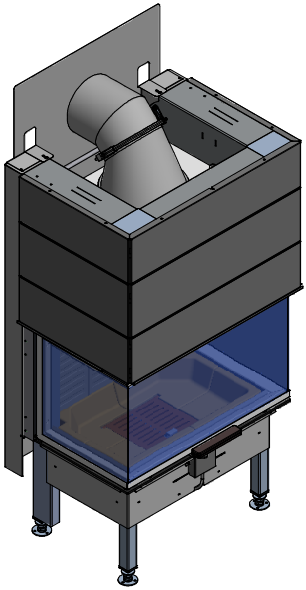

Convection

RAIS/attika stoves are convection stoves. Convection means that there is a circulation of air, which ensures that the heat is distributed more evenly throughout the entire room. The **cold air** is sucked in at the base of the stove up through the convection channel, which runs along the stove's combustion chamber.
The **heated air** pours out at the top of the stove, which ensures a circulation of warm air throughout the room.

Note, however, that all exterior surfaces become hot during use - so take extreme care.

Use the insert optimally.
By installing hot air nozzles and flexible hoses (or similar) on top of the stove, it is possible to "move" the heat to other rooms.

Consider the placement of convection and outlet holes. Ensure that the area requirements are respected and that the holes are not blocked from the outside. There may be discoloration of the wall above the stove doors, and above the convection outlet holes. This is due to the ascending hot air.

RAIS/attika accepts no liability for installation or consequential damages.

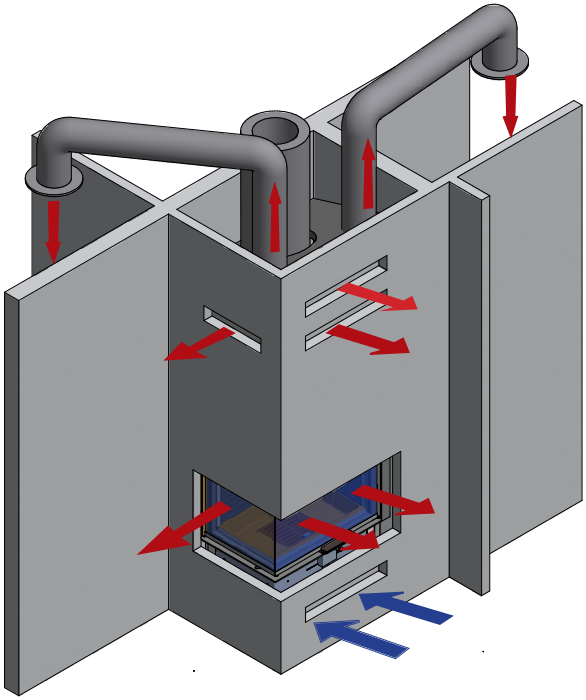

Material selection

Choose non-combustible materials for panels/bricks with a thermal resistance greater than 0.03 m^2xK/W. Thermal resistance is defined as the thickness (in m) divided by the wall's lambda value. Consult with your installer/chimney sweep.

During the test, the stove was installed into a test enclosure arrangement made of 12,5 mm Fermacell H2O Powerboard non-combustible building slabs. The inner side of the test enclosure was insulated with 25 mm mineral wool, type ProRox SL970 SC from Rockwool.
The stove was also tested against a back wall of Super Isol (calcium silicate insulating boards).

Chimney

The chimney is the driving force which makes the stove function. In order for the stove to perform satisfactorily the chimney height must be sufficient to ensure the correct draught of 14 to 18 Pa so as to clear the products of combustion and prevent problems of smoke emanating into the room when firing.
NOTE: A chimney height of not less than 4.5 metres measured vertically from the outlet of the stove to the top of the chimney should be satisfactory. Alternatively the calculation procedure given in BS 5854:1980 may be used as the basis for deciding whether a particular chimney design will provide sufficient draught.

The outlet from the chimney should be above the roof of the building in accordance with the provisions of Building Regulations Approved Document J.

If installation is into an existing chimney then it must be sound and have no cracks or other faults which might allow fumes into the house. Older properties, especially, may have chimney faults or the cross section may be too large i.e. more than 230 mm x 230 mm. Remedial action should be taken, if required, seeking expert advice, if necessary. If it is found necessary to line the chimney then a flue liner suitable for solid fuel must be used in accordance with Building Regulations Approved Document J.

Any existing chimney must be clear of obstruction and have been swept clean immediately before installation of the stove. If the stove is fitted in place of an open fire then the chimney should be swept one month after installation to clear any soot falls which may have occurred due to the difference in combustion between the stove and the open fire.

If there is no existing chimney then either a prefabricated block chimney in accordance with Building Regulations Approved Document J or a twin walled insulated stainless steel flue to BS 1856-1 can be used. These chimneys must be fitted in accordance with the manufacturer's instructions and Building Regulations.

A single wall metal fluepipe is suitable for connecting the stove to the chimney but is not suitable for using for the complete chimney. The chimney and connecting fluepipe must have a minimum diameter of 180 mm. Any bend in the chimney or connecting fluepipe should not exceed 45°. 90°bends should not be used.

Combustible material should not be located where the heat dissipating through the walls of fireplaces or flues could ignite it. Therefore when installing the stove in the presence of combustible materials due account must be taken of the guidance on the separation of combustible material given in Building Regulations Approved Document J and also in these stove instructions.

If it is found that there is excessive draught in the chimney then either an adjustable flue damper or alternatively a draught stabiliser should be fitted. The adjustable flue damper should not close off the flue entirely but should in its closed position leave a minimum continuous opening free area of at least 20 % of the total cross sectional area of the flue or fluepipe.

Adequate provision e.g. easily accessible soot door or doors must be provided for sweeping the chimney and connecting fluepipe.

You should also familiarise yourself with the draught conditions for chimneys with 2 flues.

The stove is suitable for connection with flue gas collection line, but we recommend that the inlets be placed so that there is a clearance difference between them of at least 250 mm.

The stove is supplied with a ø200 mm flue outlet spigot.
The stove is approved with a ø180 mm flue outlet spigot, which can be retrofitted.

The flue spigot can be changed from top outlet to back outlet. The clamp on the outlet is loosened and adjusted as desired.

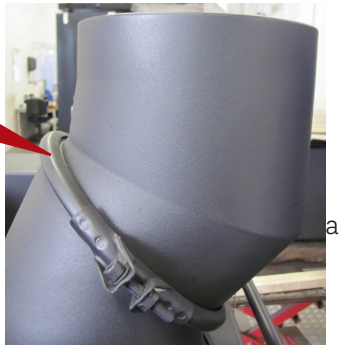

NOTE!
if the stove is installed with a back outlet, the back wall must be non combustible (e.g.a brick wall).

For strong draughts, the chimney or flue should be fitted with a draught stabiliser. In which case, it is important to ensure that there is a free flow-through area of minimum 20 cm² when the regulating gate is shut. Otherwise, the fuel energy may not be used optimally. If, at any time, you are unsure about the condition of the chimney, you should contact a chimney sweep.

Remember that access to the access door should be kept clear.
Make sure to establish access to cleaning the stove, flue collar and pipe.

Installation instructions

The following pages give instructions for the safe and proper installation of this heating appliance in the UK. These instructions cover the basic principles of installation, although detail may need slight modification to suit particular local site conditions.
In all cases the installation must comply with current UK Building Regulations, Local Authority Byelaws and other specifications or regulations as they affect the installation of the stove. Please note that it is a legal requirement under England and Wales Building Regulations that the installation of the stove is either carried out under Local Authority Building Control approval or is installed by a Competent Person registered with a Government approved Competent Persons Scheme. HETAS Ltd operate such a Scheme and a listing of their Registered Competent Persons can be found on their website at www.hetas.co.uk.

It should be noted that the current Building Regulations requirements are given in Approved Document J. These requirements may also be met by adopting the relevant recommendations given in British Standards BS 8303 and BS EN 15287-1.

WARNING: Health and Safety Advice Notice

The installation of this heating appliance is governed by the Health and Safety at Work Act 1974. It is the responsibility of the installer to ensure that all requirements of this Act are met during the installation works. Attention is drawn in particular to the following:

Handling
The appliance is a heavy item and adequate facilities must be available for loading, unloading and site handling.

Fire Cement
Some types of fire cement are caustic and should not be allowed to come into contact with the skin. Protective gloves should be worn when handling fire cement. In case of contact with the skin wash immediately with plenty of water.

Asbestos
This stove contains no asbestos. If there is a possibility of disturbing any asbestos in the course of installation then please seek specialist guidance and use appropriate protective equipment.

Metal Parts
When installing or servicing this stove care should be taken to avoid the possibility of personal injury.

Important Warning –Preparatory Work and Safety Checks:

- This stove must not be installed into a chimney that serves any other heating appliance.
- It's recommended not have an extractor fan fitted in the same room as the stove as this can cause the stove to emit fumes into the room.
- If this appliance is installed into an existing chimney, the chimney must first be swept and examined for soundness and suitability before the appliance is installed (see also section headed "Chimney").

NOTE!!
This appliance may only be installed by a qualified RAIS dealer/installer.
See www.rais.com for dealer list.

Installation

This appliance may only be installed by a qualified Rais dealer/installer, otherwise the warranty is voided.

When installing the appliance, all local rules and regulations, including those referring to national and European standards need to be complied with. Local authorities and a chimney specialist should be contacted prior to set up.

It is prohibited to carry out unauthorised alterations to the stove.

There must be plenty of fresh air in the room where the stove is being installed, in order to ensure proper combustion. Note that any mechanical exhaust ventilation - e.g. an extraction hood - may reduce the air supply. Any air grates must be placed in such a manner, that the air supply is not blocked. Alternatively, the stove is supplied with fresh air directly from the outside through a flex tube fitted to the damper (see section 'Airsystem').

The floor structure must be able to carry the weight of the wood burning stove, as well as the weight of a chimney, if necessary. If the existing floor construction doesn't meet this requirement, suitable measures (e.g. load distributing plate) shall be taken to achieve it. RAIS recommends to consult a building expert.

The stove is placed on fireproof material.
The stove should be set up at a safe distance from inflammable materials.
When you choose where to set up your RAIS wood burning stove, you should consider the heat distribution to the other rooms. This will enable you to get the best use out of your stove.

See the manufacturer's plate on the wood burning stove.
Upon receiving the stove must be inspected for defects.

Installation distances

To determine whether the wall next to where the stove is going to be installed is flammable, you should contact your building contractor or the local building authorities.

The hearth should be able to accommodate the weight of the stove. The chimney must be independently supported by wall brackets or a ceiling support plate. The weight of the stove is indicated in the brochure.

The stove should always be installed on a non-combustible hearth of a size and construction that is in accordance with the provisions of the current UK Building Regulations Approved Document J.

If the stove is to be installed on a wooden floor, it must be covered with a non-combustible material at least 12 mm thick, in accordance with UK Building Regulations Approved Document J, to at distance of 225 mm in front of the stove and 150 mm to each side measuring from the door of the combustion chamber.

The clearance distances to combustible material beneath, surrounding or upon the hearth and walls adjacent to the hearth should comply with the guidance on the separation of combustible material given in UK Building Regulations Approved Document J and also in these stove instructions.
It must be ensured that no combustible objects (eg. furniture) are placed closer than the distances given in the following tables (risk of fire).

Mounting the reflektor plate - VISIO 1 & 2

The stove is fitted with a reflector plate on the back side.

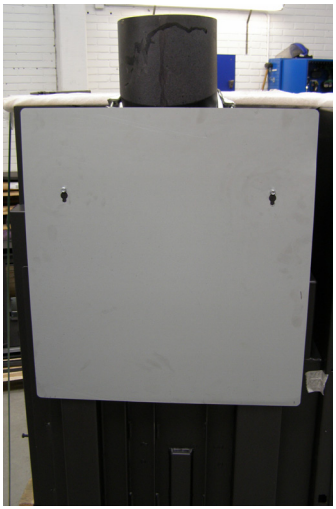

Dismount the reflector plate and turn it upside down. Mount the plate reusing the screws (as shown).

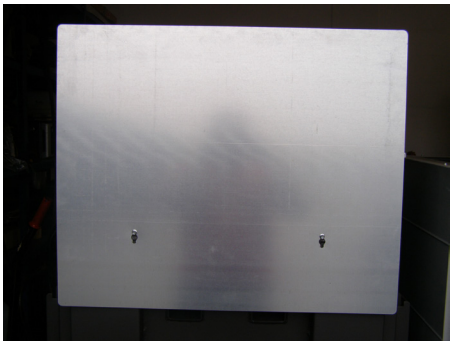

Mounting the reflector plate - VISIO 3

The stove is fitted with a reflector plate.

Dismount the reflector plate and turn it upside down. Mount the plate by reusing the screws at the bottom.

Bend the cut-outs and mount the plate to the top of the stove.

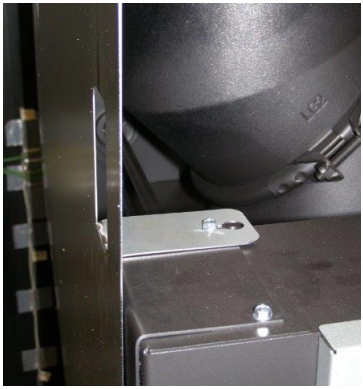

Transport safety

Before installing the stove remove the transport safety:

- on VISIO 1 remove 2 screws on the side.
- on VISIO 2 remove 1 screw on the side.
- on VISIO 3 remove 2 screws on the back side.

Wall opening VISIO 1 - calcium silicate insulating boards

Wall opening (height x width x depth) min. 432 x 770 mm (inner dimensions).
Inner distance to the back wall is min. 620 mm and to the side wall it is min. 1047 mm.
In case the stove is placed against a combustible wall, the back and side walls must be made of 50 mm calcium silicate insulating boards.

The inner dimensions (wall opening) applies for installing the stove **without** outer front cover (accessory). If a front cover is used, the wall opening is to be increased/corrected equalling the thickness of the front cover.

A fireplace insert must never be built in tightly as steel expands during heating.

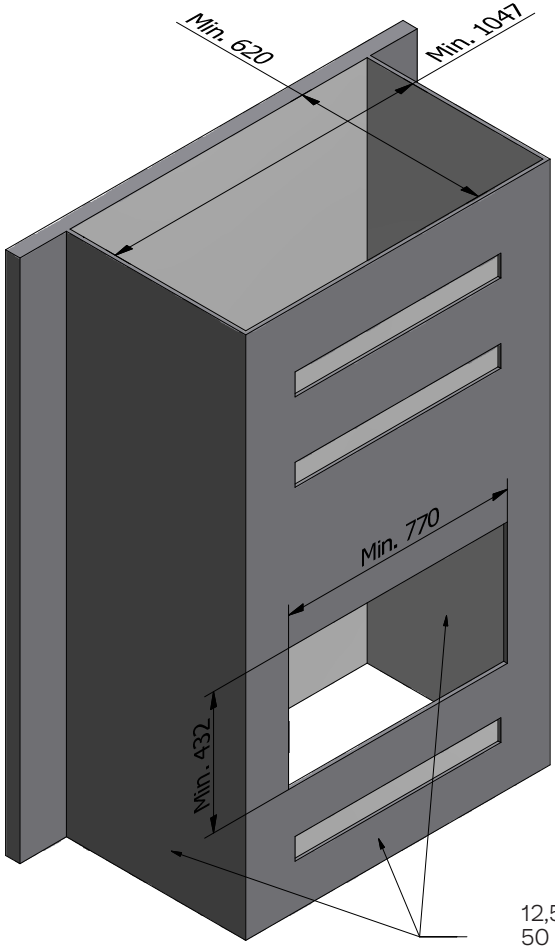

12,5 mm Fermacell eller 50 mm calcium silicate bords

VISIO 1 - Built-in dimensions

Wall opening VISIO 2 - 12.5 mm Fermacell with 25 mm mineral wool

Wall opening (height x width x depth) min. 432 x 770 mm (inner dimensions).
Inner distance to the back wall is min. 620 mm and to the side wall it is min. 1047 mm.
In case the stove is placed against a combustible wall, the back and side walls must be made of 12.5 mm Fermacell + 25 mm mineral wool. The mineral wool is facing the stove.

The inner dimensions (wall opening) applies for installing the stove **without** outer front cover (accessory). If a front cover is used, the wall opening is to be increased/corrected equalling the thickness of the front cover.

A fireplace insert must never be built in tightly as steel expands during heating.

Construction of back & side wall.

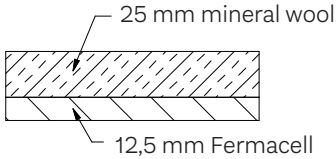

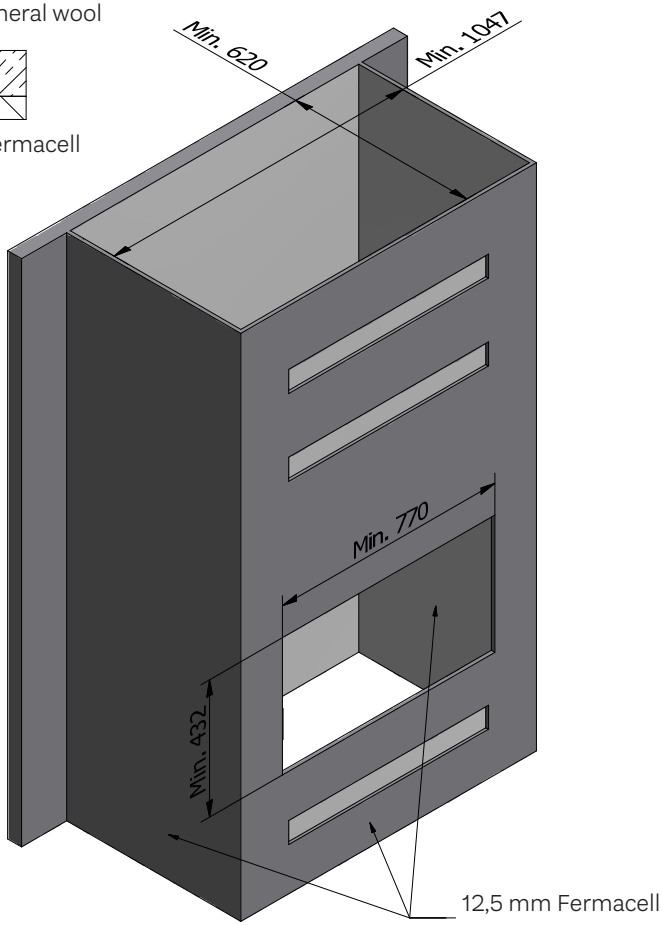

NOTE!

When installing without outer front cover (accessory) RAIS recommends an air gap of 5 mm between panels and the stove top (see drawing beneath).
Air gap (inner) at the top of the stove.

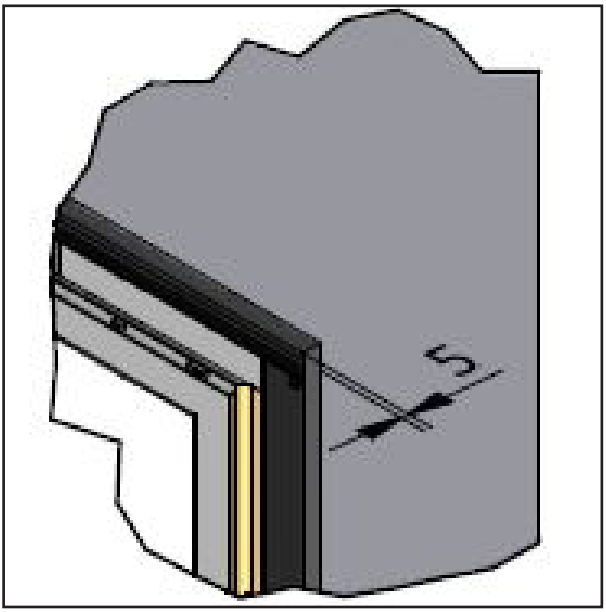

Due to the stoves structure there will be air gaps of 26,5 mm to the sides and the bottom, which can be closed e.g. with non-combustible panels.

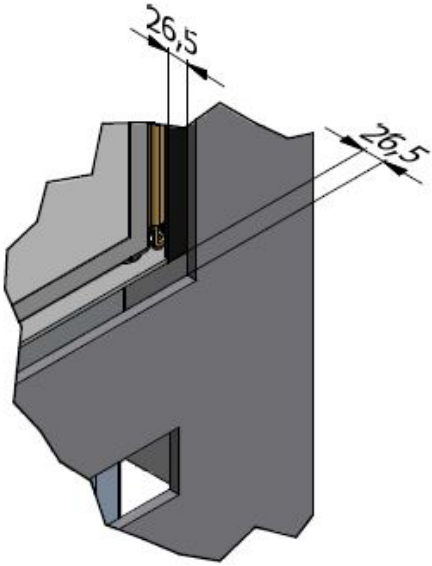

Wall opening VISIO 1 - brick wall

Wall opening (height x width x depth) min. 432 x 770mm (inner dimensions).
Inner distance to the back wall is min. 557 mm and to the side wall it is min. 928 mm.

The inner dimensions (wall opening) applies for installing the stove **without** outer front cover (accessory). If a front cover is used, the wall opening is to be increased/corrected equalling the thickness of the front cover.

A fireplace insert must never be built in tightly as steel expands during heating.

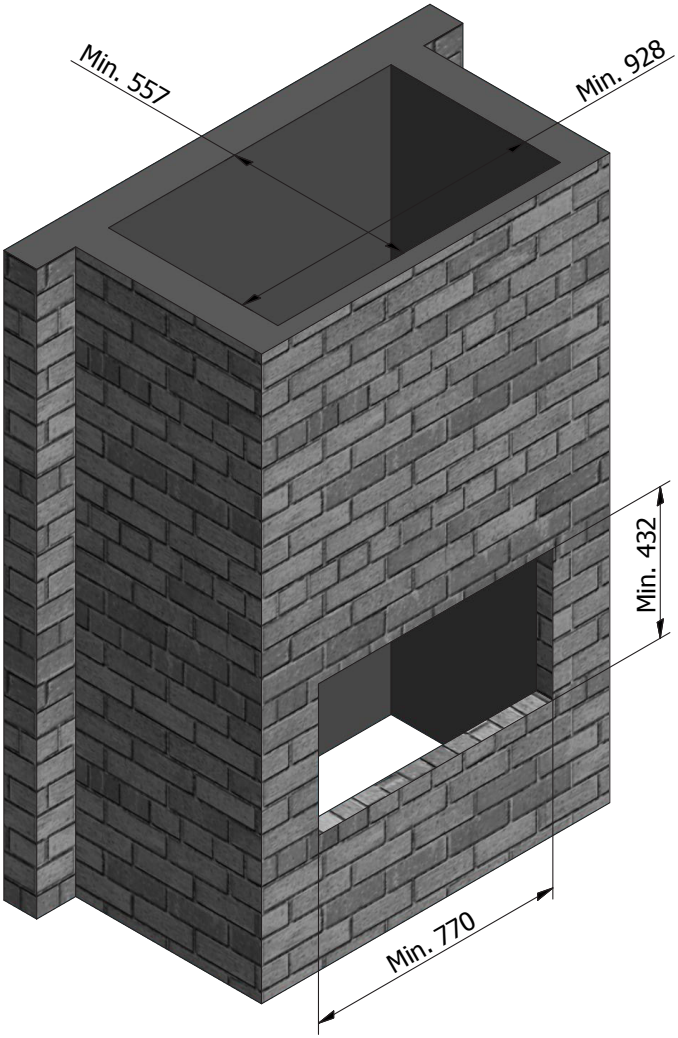

NOTE!

When installing without outer front cover (accessory) RAIS recommends an air gap of 5 mm between the bricks and the stove top (see drawing beneath).
Air gap (inner) at the top of the stove.

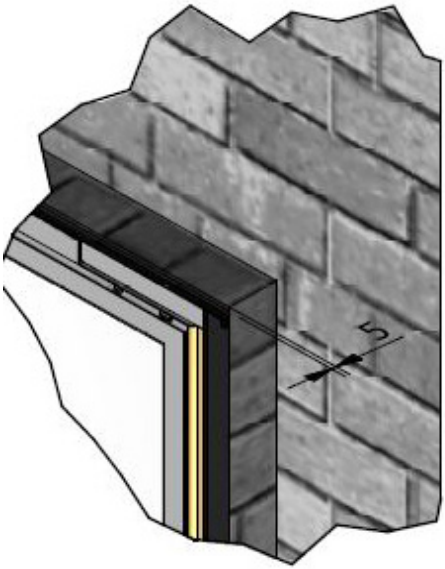

Due to the stoves structure there will be air gaps of 26,5 mm to the sides and the bottom, which can be closed e.g. with non-combustible panels.

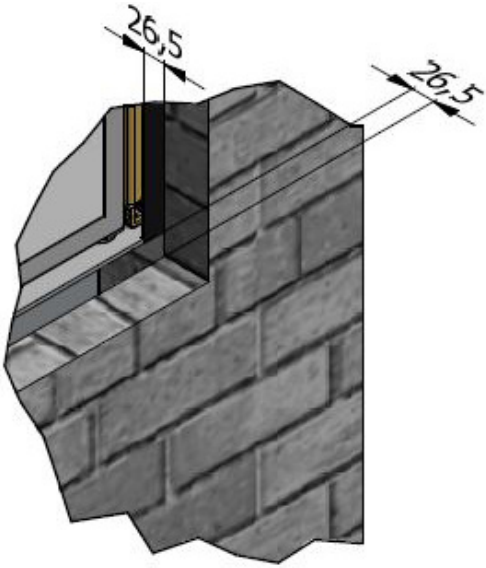

VISIO 1 - Installation distances

Panels - VISIO 1

Panel types:

- 12,5 mm Fermacell med 25 mm ineral wool
- 50 mm calcium silicate bords

Convection areas must be installed above and below the stove.

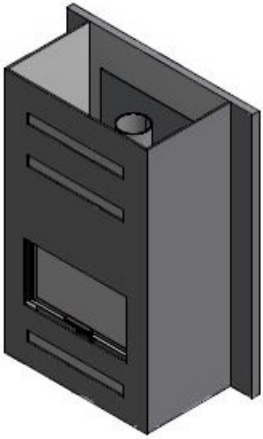

Construction of back wall, side wall and sloped plate

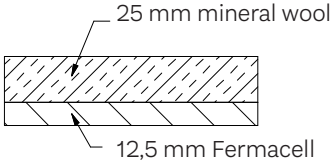

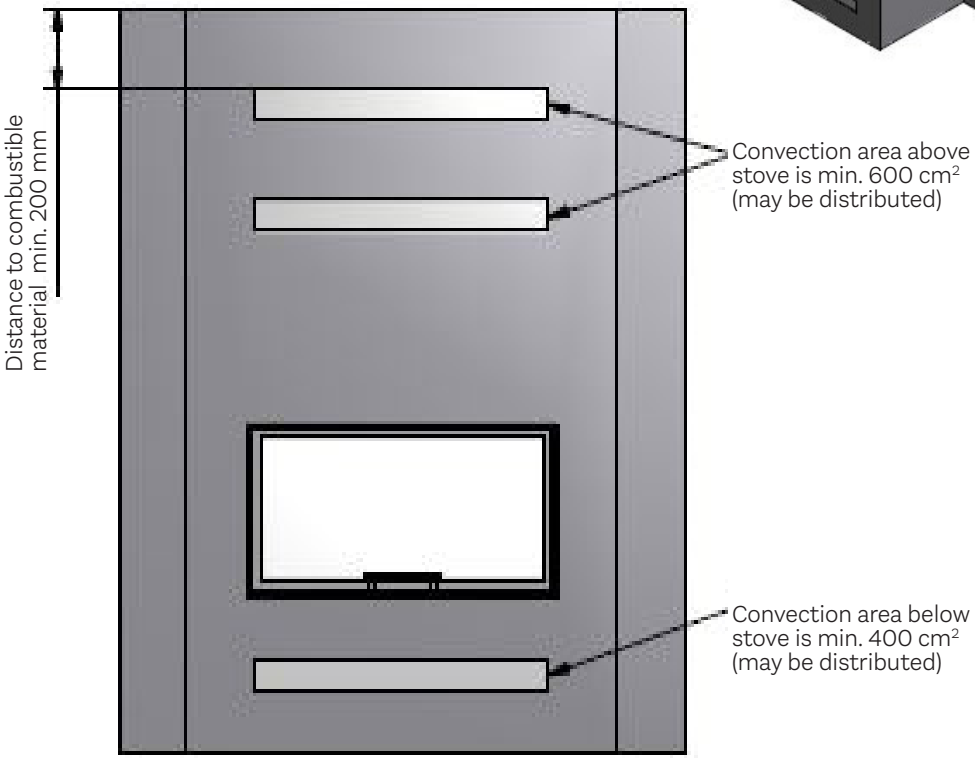

VISIO 1 - Installation distances - panels

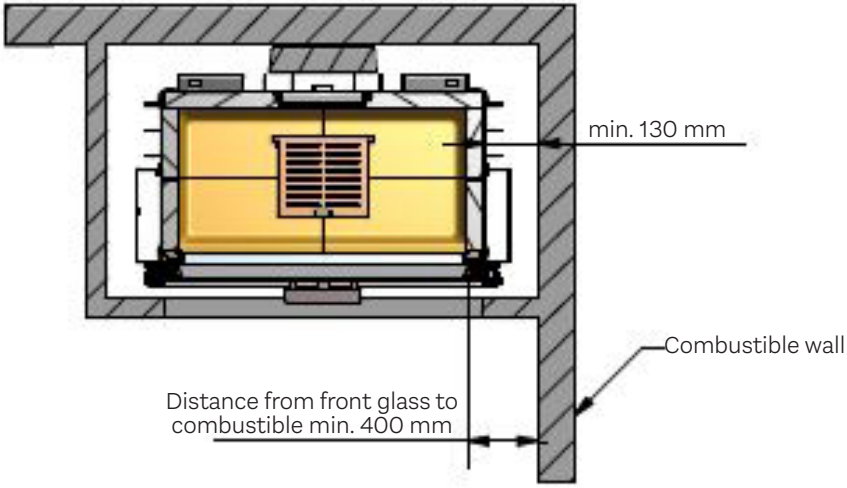

Alternative

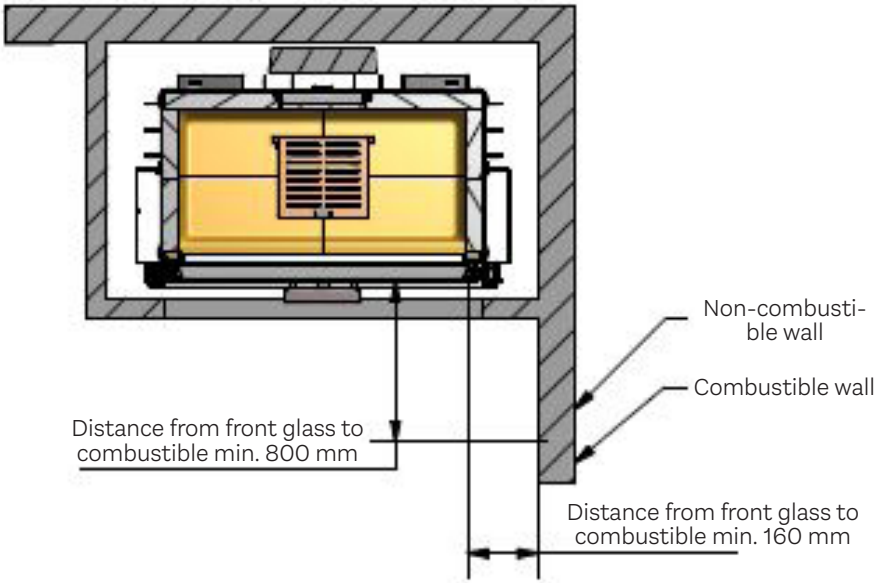

VISIO 1 - installation distances - panels

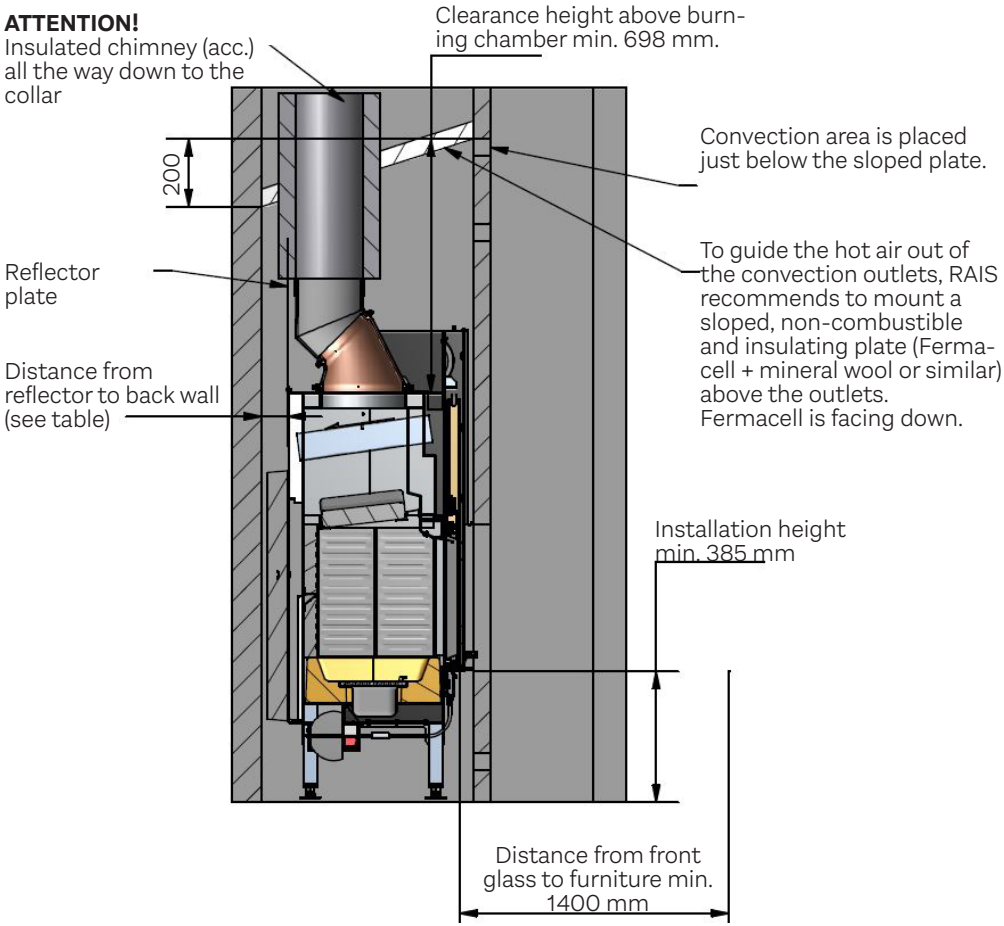

Panel type	Distance to back wall
12,5 mm Fermacell with 25 mm mineral wool	75 mm
50 mm calcium silicate bords	62,5 mm

Brick wall - VISIO 1

If convection areas are installed above and below the stove, the distances to combustible materials from VISIO 1 panel installation can be applied.
If insufficient convection is created, the brick walls may be damaged.

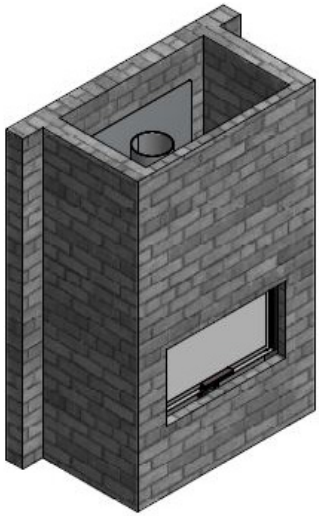

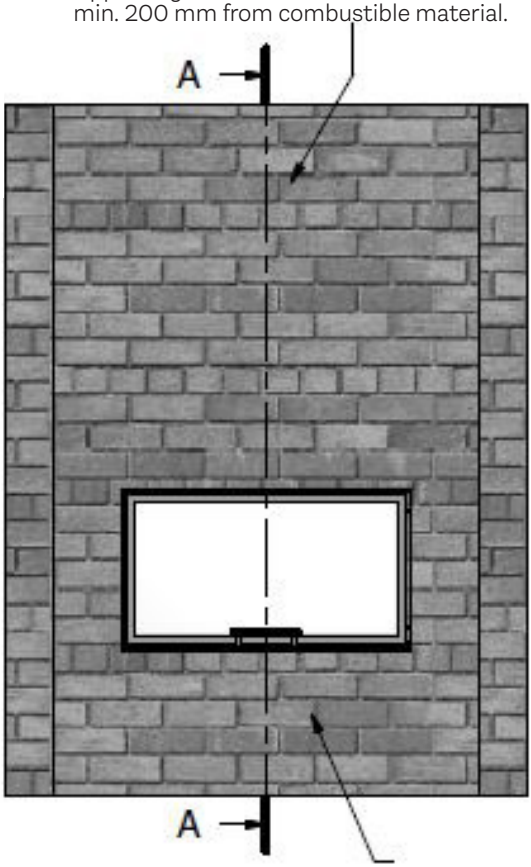

VISIO 1 - Installation distances - brick wall

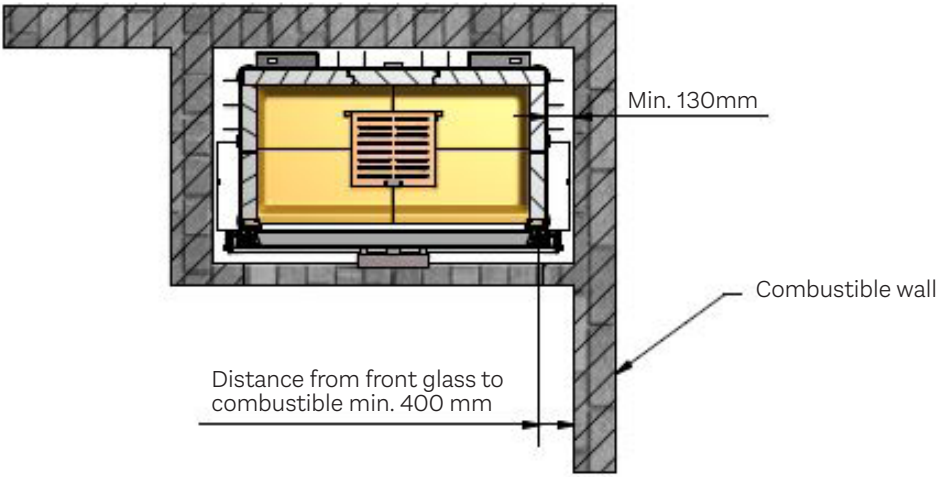

Alternative

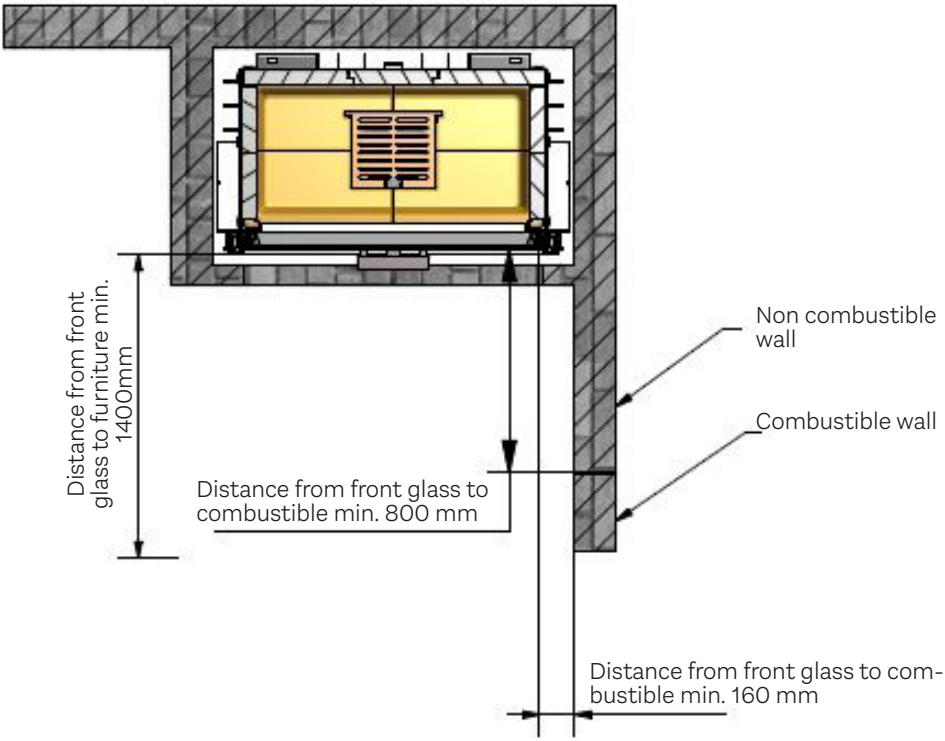

VISIO 1 - Installation distances - brick wall

Clearance height above burning chamber min. 698 mm

200

Any convection areas must be placed just below the sloped plate.

To guide the hot air out of the convection outlets, RAIS recommends to mount a sloped, non-combustible and insulating plate (Fermacell + mineral wool or similar) above the outlets.
Fermacell is facing down.

Reflector plate

Distance from reflector to non-combustible 0 mm
(10 mm is recomended).

Installation height min. 385 mm

Distance from front glass to furniture min. 1400 mm

Opbygning af skråplade

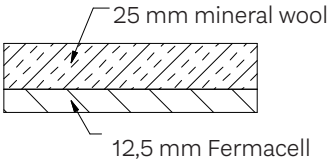

Wall opening VISIO 2 - calcium silicate insulating boards
(i.e. 50 mm Super Isol og Fermatec 225)

Wall opening (height x width x depth) min. 432 x 685 x 490 mm (inner dimensions). Inner distance to the back wall is min. 617.5 mm and to the side wall it is min. 840 mm.
In case the stove is placed against a combustible wall, the back and side walls must be made of 50 mm calcium silicate insulating boards.

The inner dimensions (wall opening) applies for installing the stove **without** outer front cover (accessory). If a front cover is used, the wall opening is to be increased/corrected equalling the thickness of the front cover.
A fireplace insert must never be built in tightly as steel expands during heating.

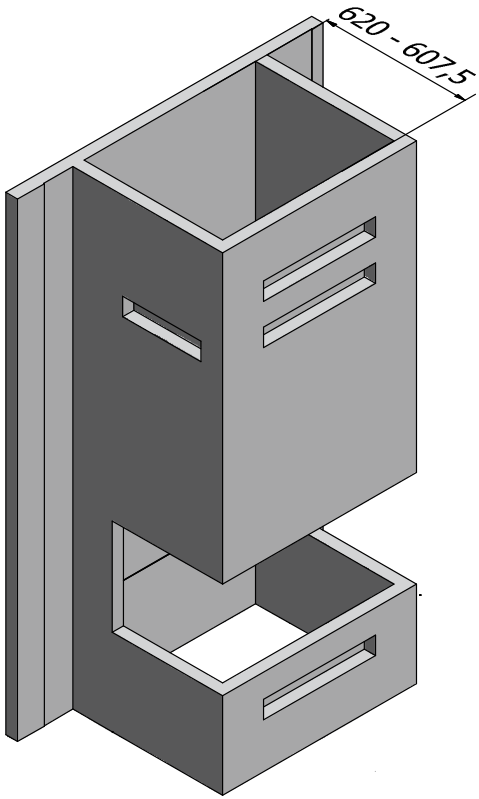

12,5 mm Fermacell or
50 mm calcium silicate boards

VISIO 2 - Built-in dimensions

Wall opening VISIO 2 - 12.5 mm Fermacell with 25 mm mineral wool

Wall opening (height x width x depth) min. 432 x 685 x 490 mm (inner dimensions). Inner distance to the back wall is min. 630 mm and to the side wall it is min. 840 mm. In case the stove is placed against a combustible wall, the back and side walls must be made of 12.5 mm Fermacell + 25 mm mineral wool. The mineral wool is facing the stove.

The inner dimensions (wall opening) applies for installing the stove **without** outer front cover (accessory). If a front cover is used, the wall opening is to be increased/corrected equalling the thickness of the front cover.
A fireplace insert must never be built in tightly as steel expands during heating.

Construction of
back wall and side wall

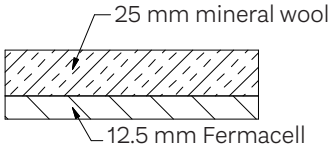

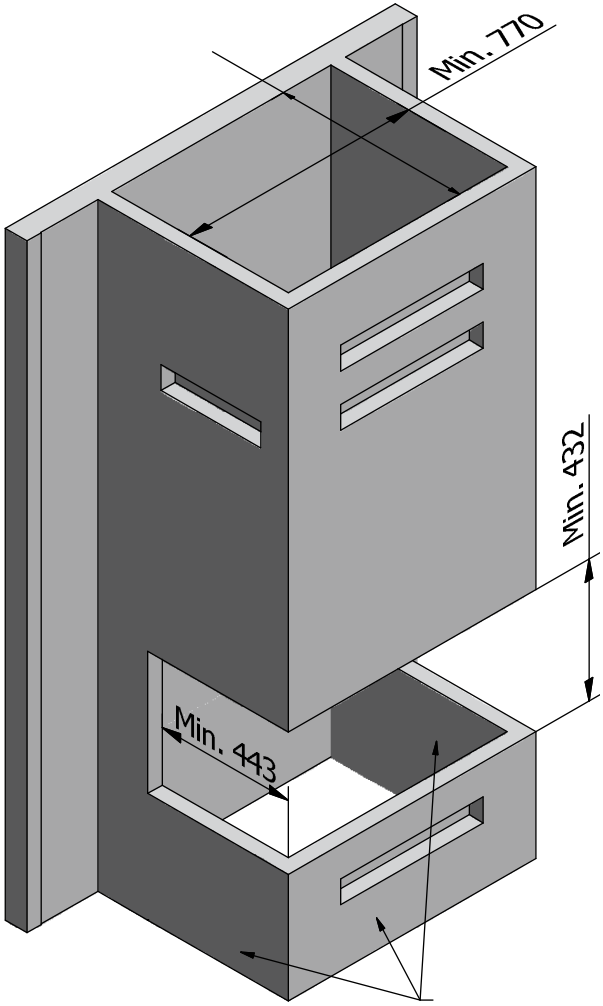

NOTE!

When installing without outer front cover (accessory) RAIS recommends an air gap of 5 mm between panels and the stove top (see drawing beneath).
Air gap (inner) at the top of the stove.

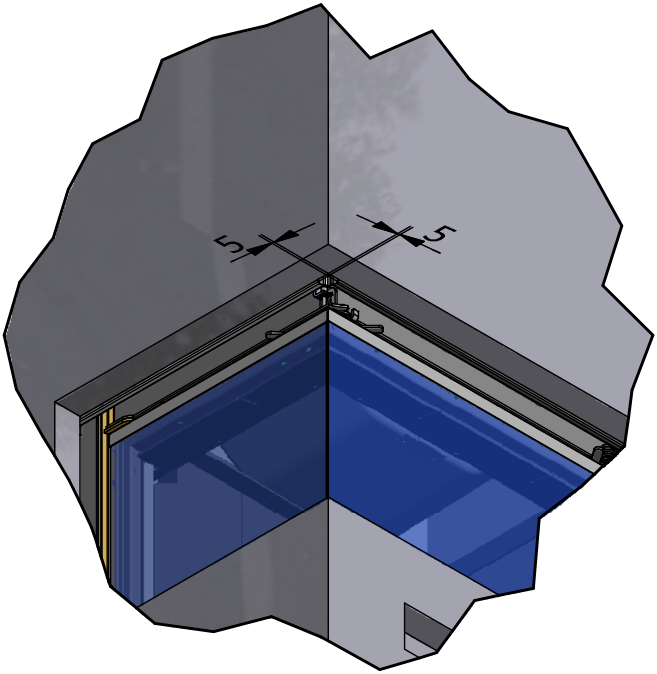

Due to the stoves structure there will be air gaps of 34 mm to the sides and the bottom, which can be closed e.g. with non-combustible panels.

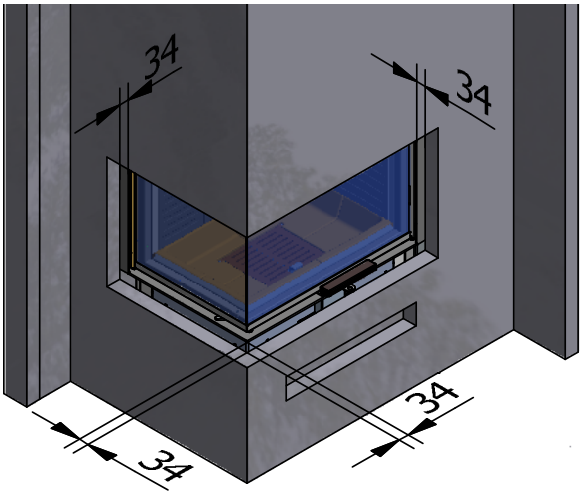

Wall opening VISIO 2 - brick wall

Wall opening (height x width x depth) min. 432 x 685 x 490 mm (inner dimensions). Inner distance to the back wall is min. 600 mm and to the side wall it is min. 840 mm.

The inner dimensions (wall opening) applies for installing the stove **without** outer front cover (accessory). If a front cover is used, the wall opening is to be increased/corrected equalling the thickness of the front cover.

A fireplace insert must never be built in tightly as steel expands during heating.

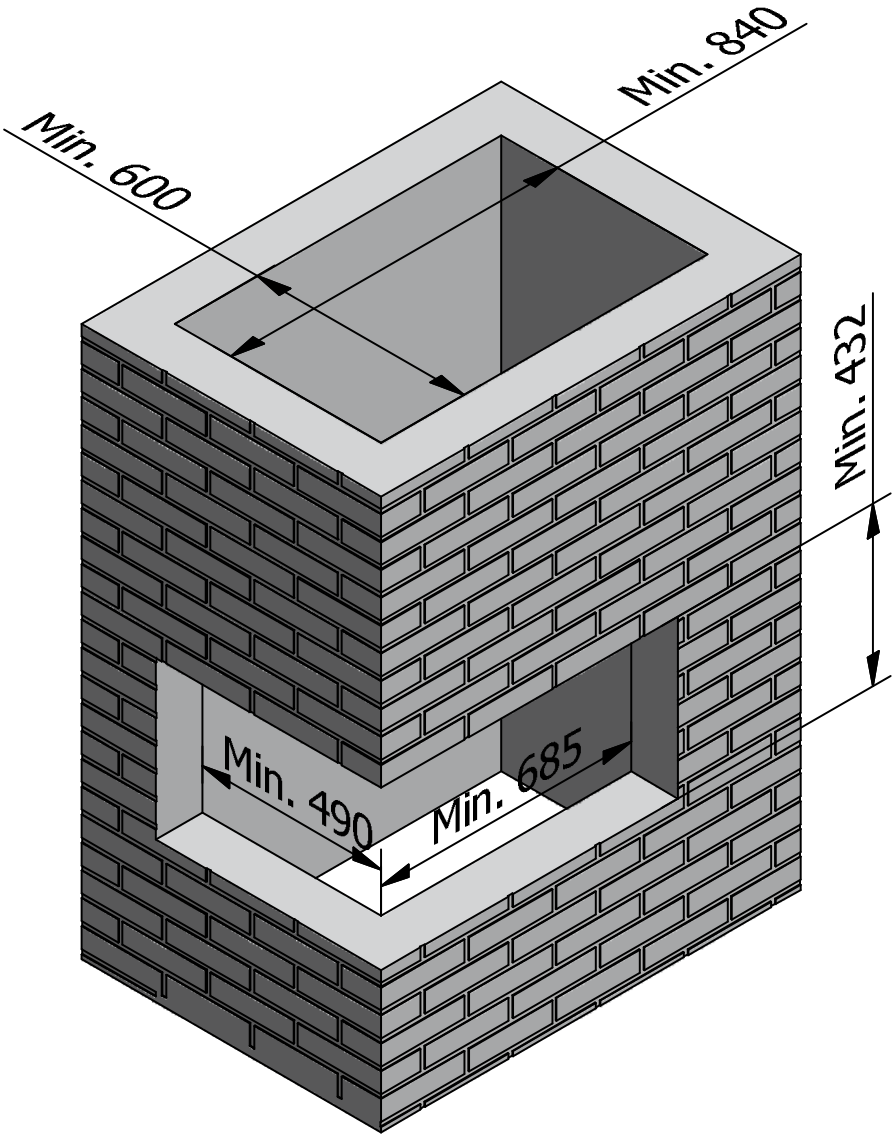

NOTE!

When installing without outer front cover (accessory) RAIS recommends an air gap of 5 mm between the bricks and the stove top (see drawing beneath).

Air gap (inner) at the top of the stove.

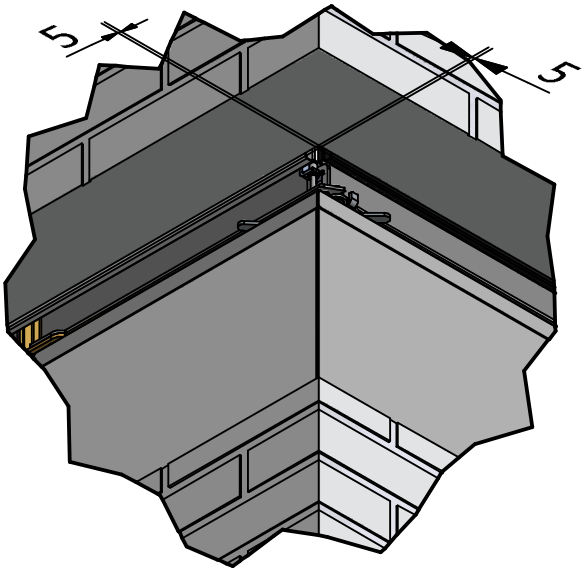

Due to the stoves structure there will be air gaps of 34 mm to the sides and the bottom, which can be closed e.g. with non-combustible panels.

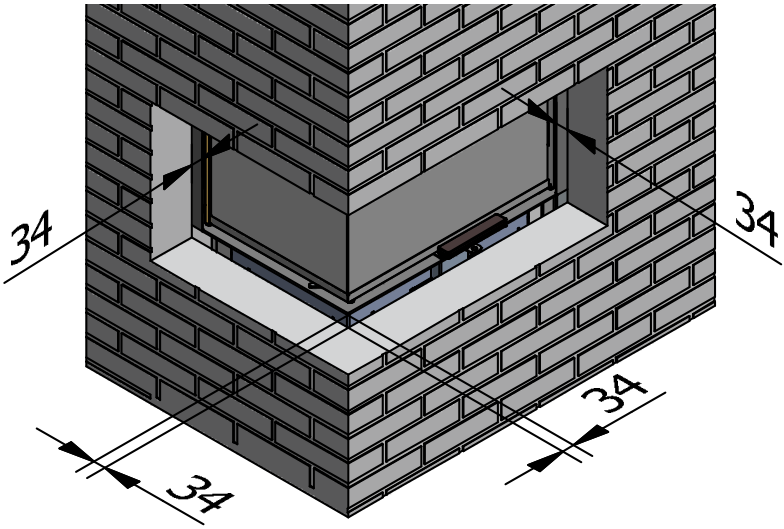

VISIO 2 - Installation distances

Panels - VISIO 2

Panel types:

- 12.5 mm Fermacell with 25 mm mineral wool
- 50 mm calcium silicate boards

Convection areas must be installed above and below the stove.

Construction of back wall, side wall and sloped plate.

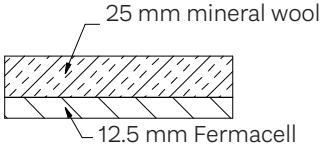

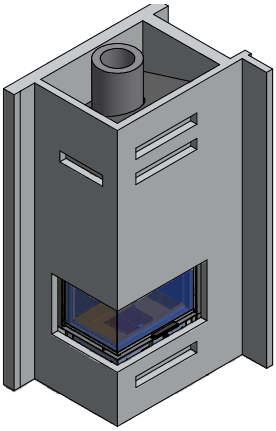

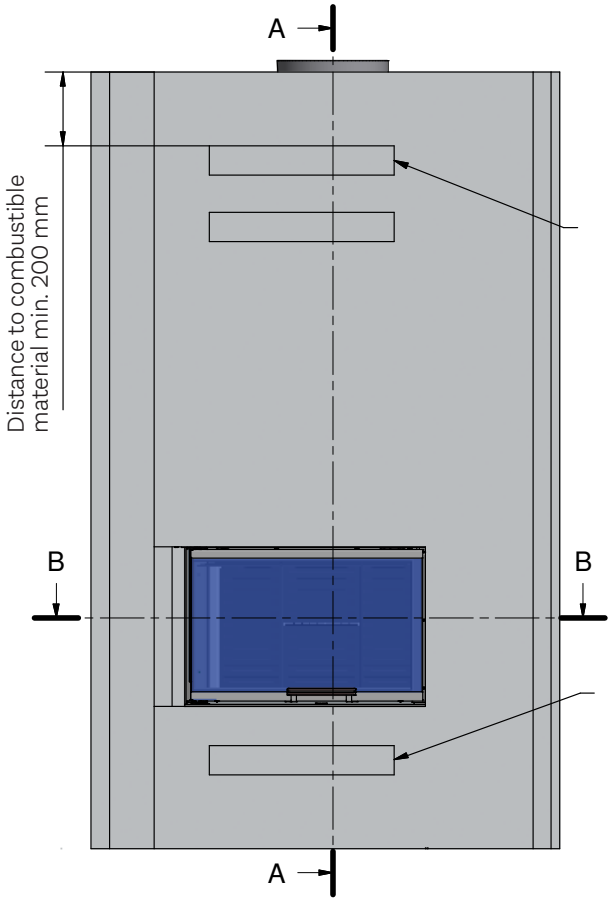

Convection area above stove is min. 600 cm^2 (may be distributed)

Convection area below stove is min. 400 cm^2 (may be distributed)

VISIO 2 - installation distances - panels

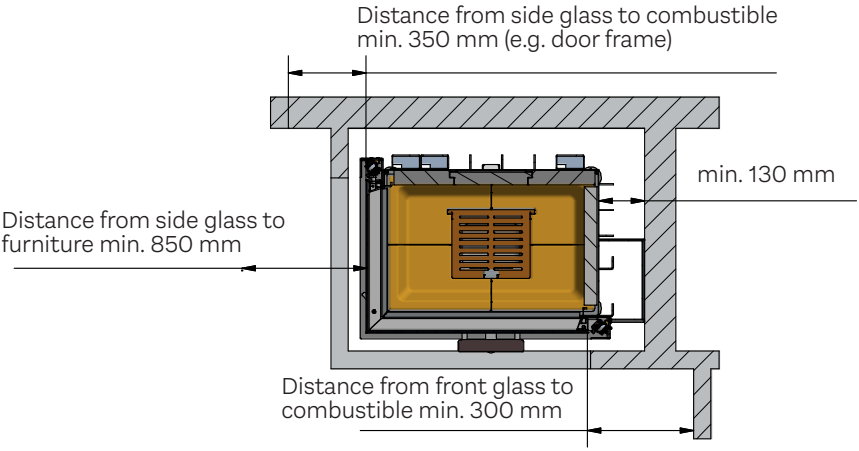

Alternative

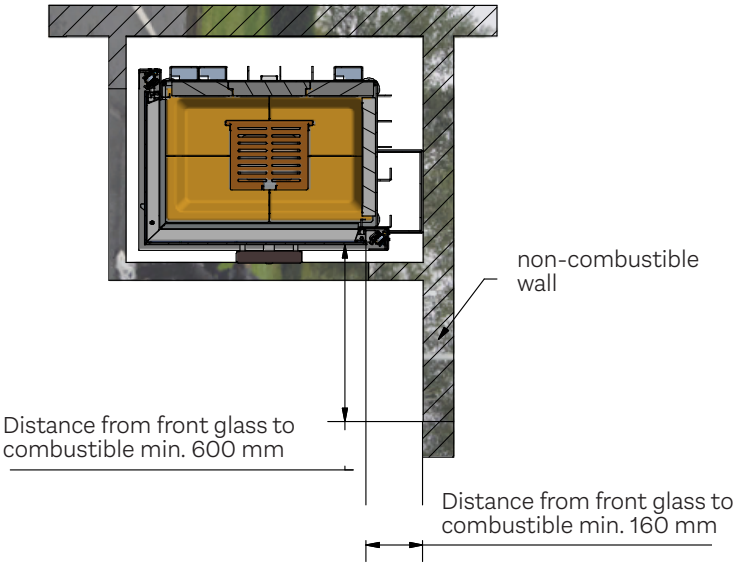

VISIO 2 - installation distances - panels

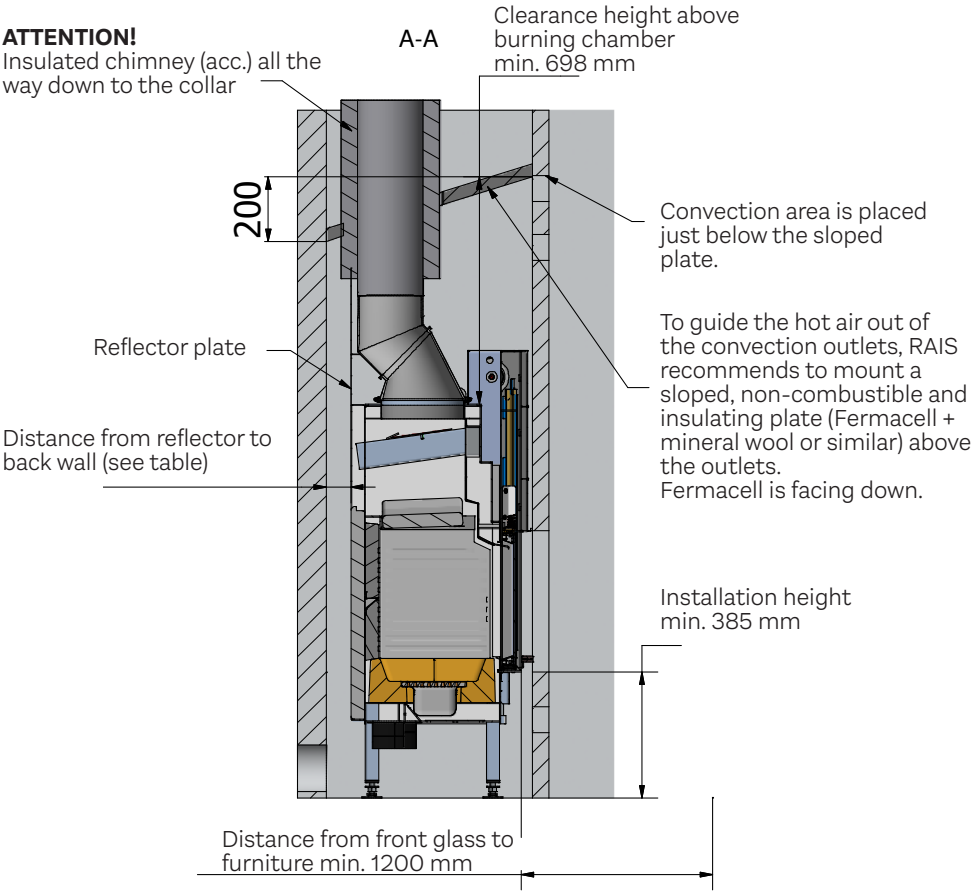

Panel type	Distance to back wall
12.5 mm Fermacell with 25 mm brandbats	75 mm
50 mm calcium silicate boards	62.5 mm

Brick wall - VISIO 2

If convection areas are installed above and below the stove, the distances to combustible materials from VISIO 2 panel installation can be applied.
If insufficient convection is created, the brick walls may be damaged.

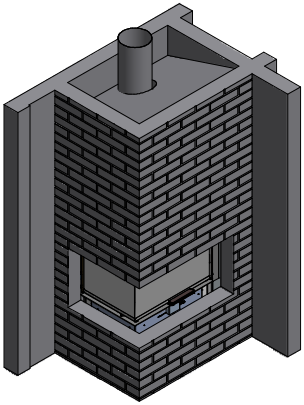

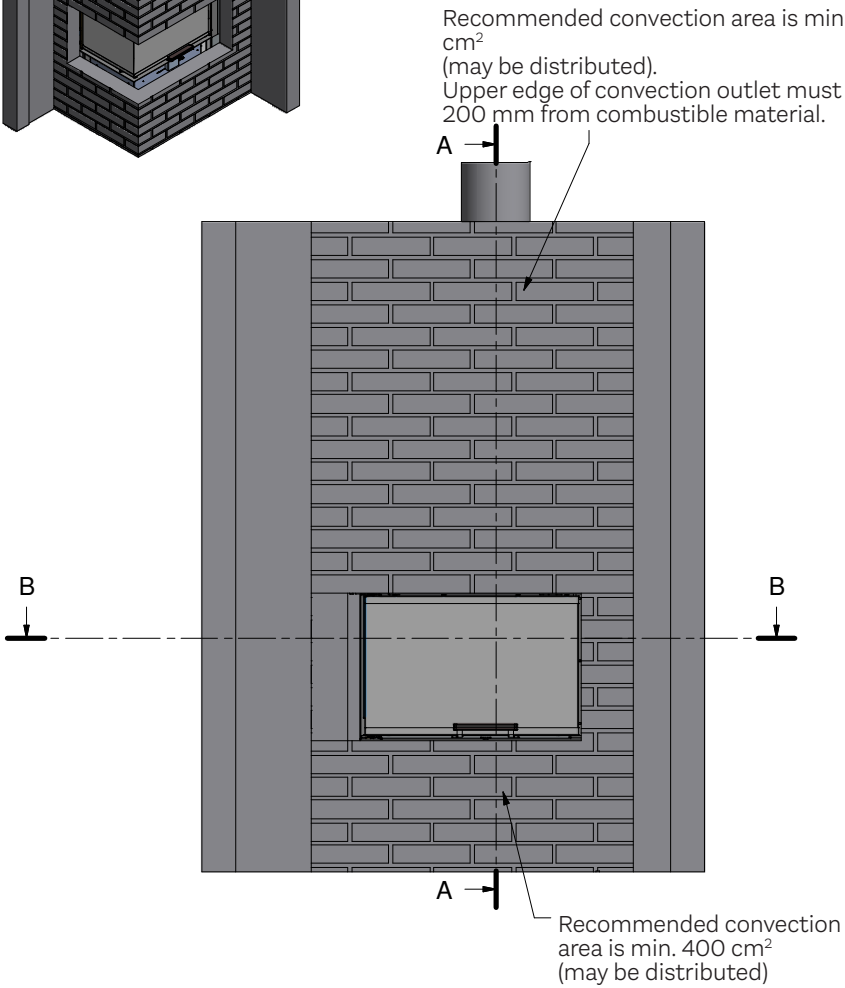

VISIO 2 - installation distances- brick wall

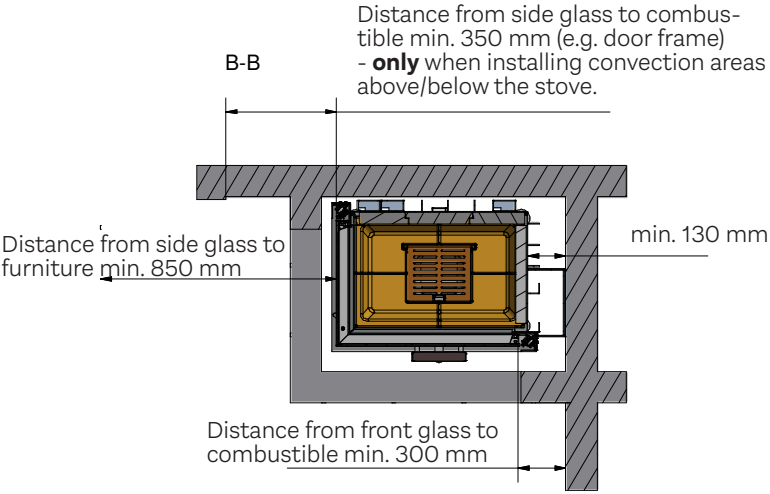

Alternative

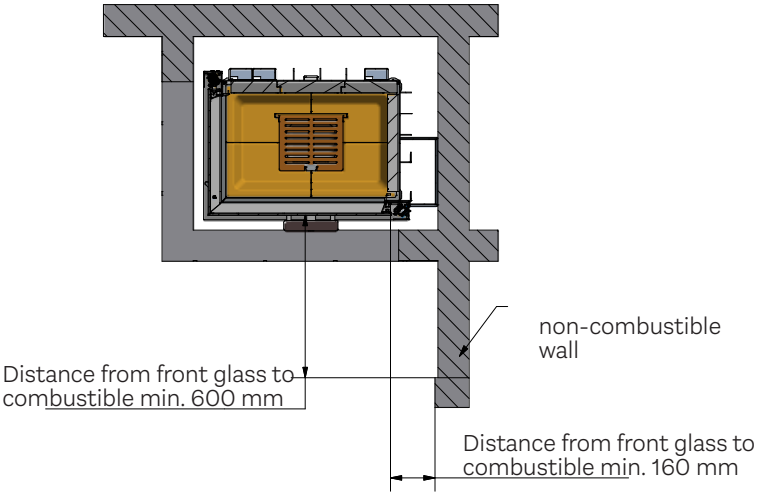

VISIO 2 - installation distances- brick wall

A-A

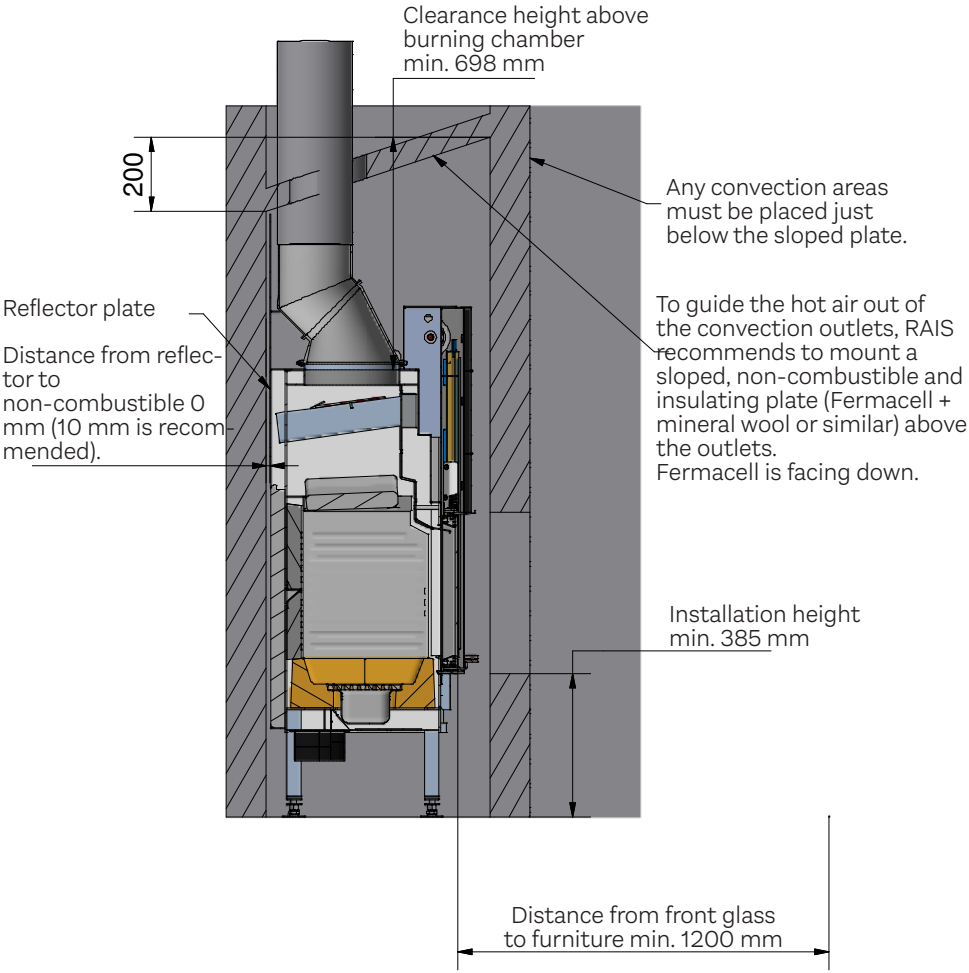

Construction of sloped plate.

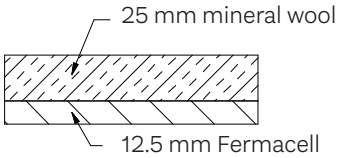

VISIO 3 - Built-in dimensions

Wall opening VISIO 3 - panels

Wall opening (height x width x depth) min. 432 x 770 x 443 mm (inner dimensions).

Panel type	Inner distance to back wall
12.5 mm Fermacell with 25 mm mineral wool	620 mm
50 mm calcium silicate boards	607.5 mm

In case the stove is placed against a combustible wall, the back wall must be made of 12.5mm Fermacell + 25mm mineral wool or 50 mm calcium silicate boards. The mineral wool is facing the stove.

The inner dimensions (wall opening) applies for installing the stove **without** outer front cover (accessory). If a front cover is used, the wall opening is to be increased/corrected equalling the thickness of the front cover.
A fireplace insert must never be built in tightly as steel expands during heating.

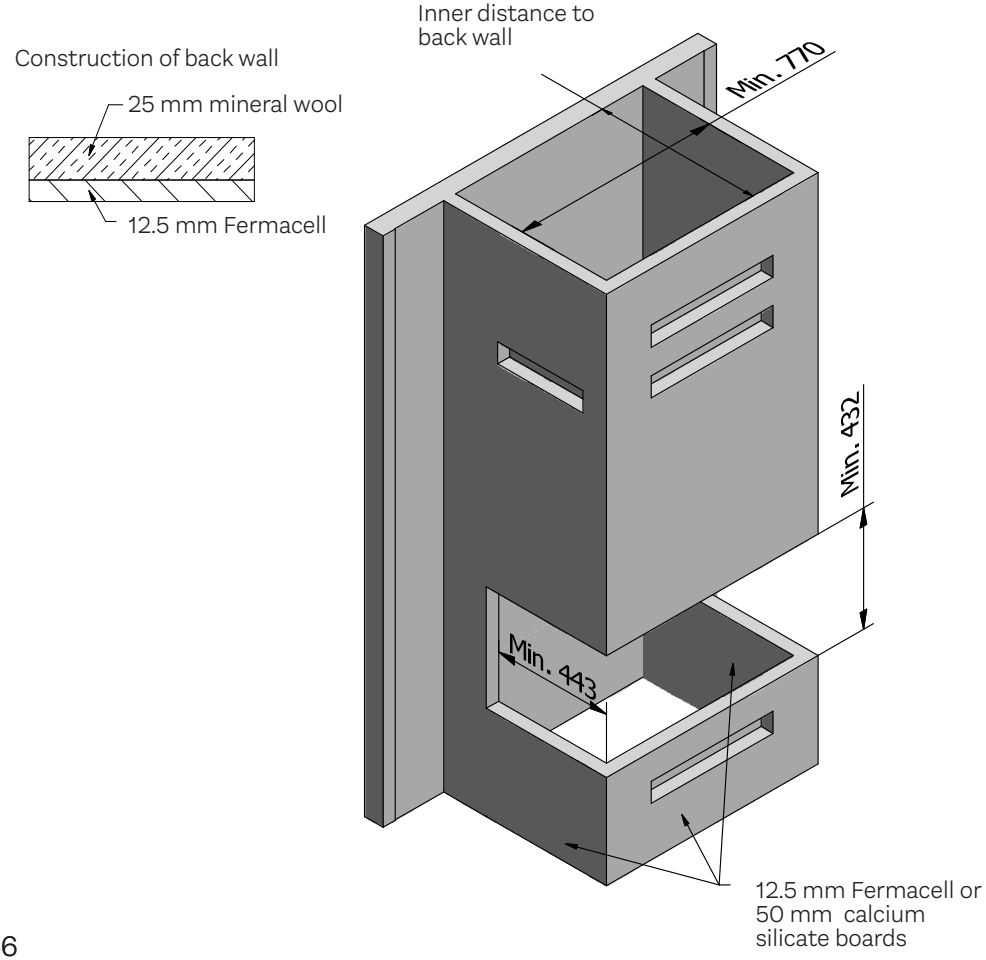

Wall opening VISIO 3 - brick wall

Wall opening (height x width x depth) min. 432 x 770 x 443 mm (inner dimensions). Inner distance to the back wall is min. 580 mm.

The inner dimensions (wall opening) applies for installing the stove **without** outer front cover (accessory). If a front cover is used, the wall opening is to be increased/corrected equalling the thickness of the front cover.
A fireplace insert must never be built in tightly as steel expands during heating.

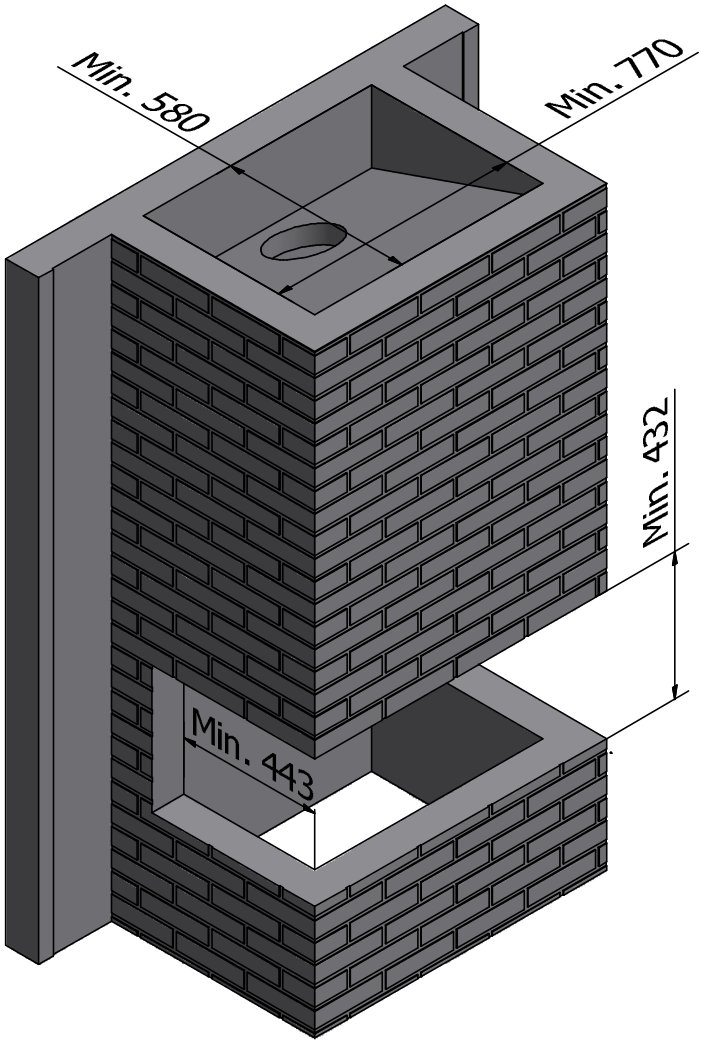

VISIO 3 - Installation distances

Panels - VISIO 3

Panel types:

- 12.5 mm Fermacell with 25 mm mineral wool
- 50 mm calcium silicate boards

Convection areas must be installed above and below the stove.

Construction of back wall and sloped plate

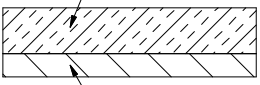

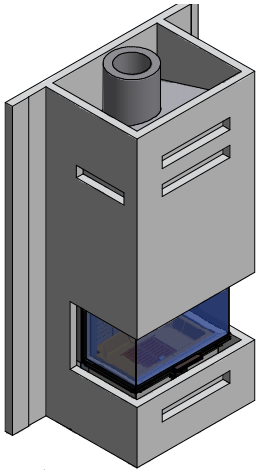

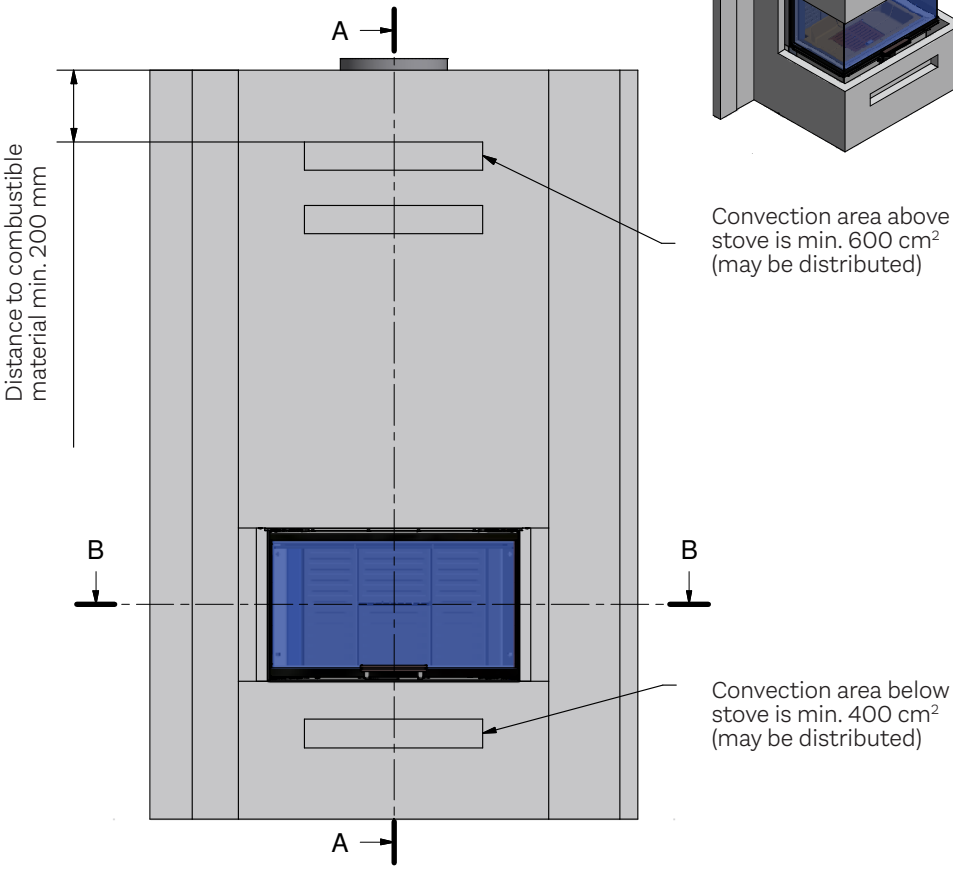

VISIO 3 - installation distances - panels

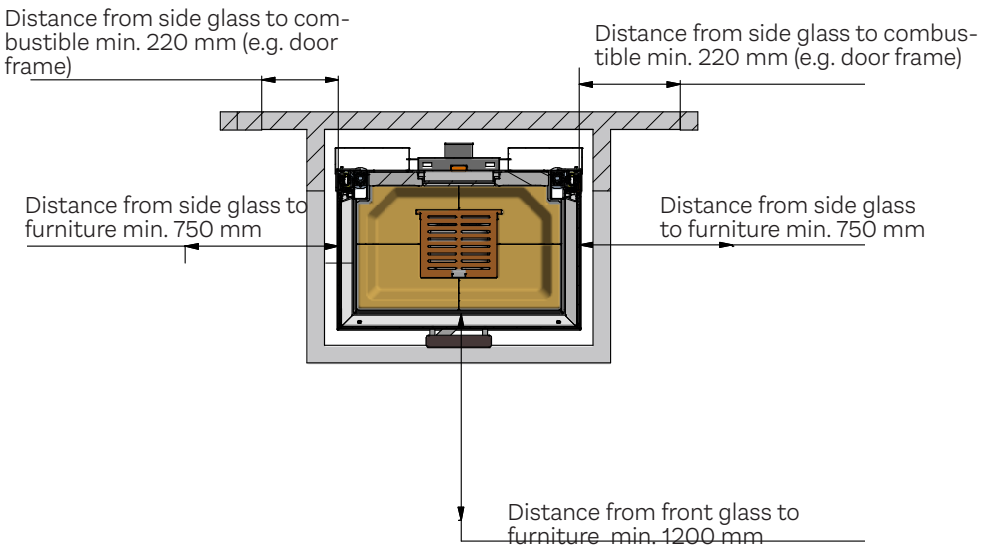

NOTE!

When installing without outer front cover (accessory) RAIS recommends an air gap of 5 mm between the bricks and the stove top (see VISIO 2).

Due to the stoves structure there will be air gaps of 34 mm to the sides and the bottom(see VISIO 2), which can be closed e.g. with non-combustible panels.

VISIO 3 - installation distances - panels

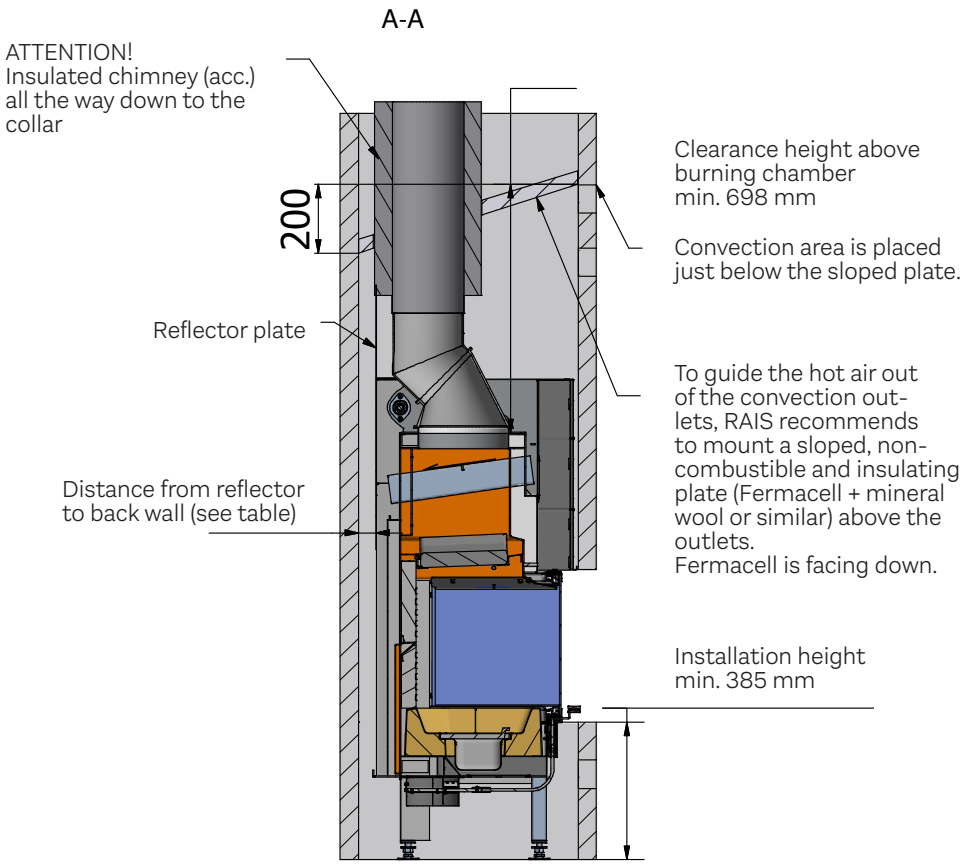

Panel type	Distance to back wall
12.5 mm Fermacell with 25 mm mineral wool	50 mm
50 mm calcium silicate boards	37,5 mm

Brick wall - VISIO 3

If convection areas are installed above and below the stove, the distances to combustible materials from VISIO 2 panel installation can be applied.
If insufficient convection is created, the brick walls may be damaged.

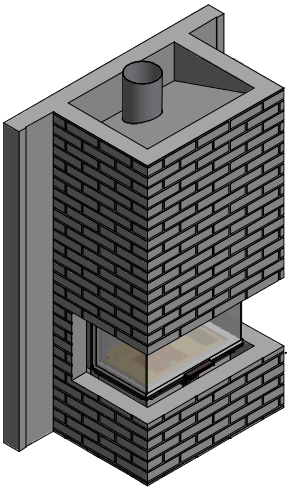

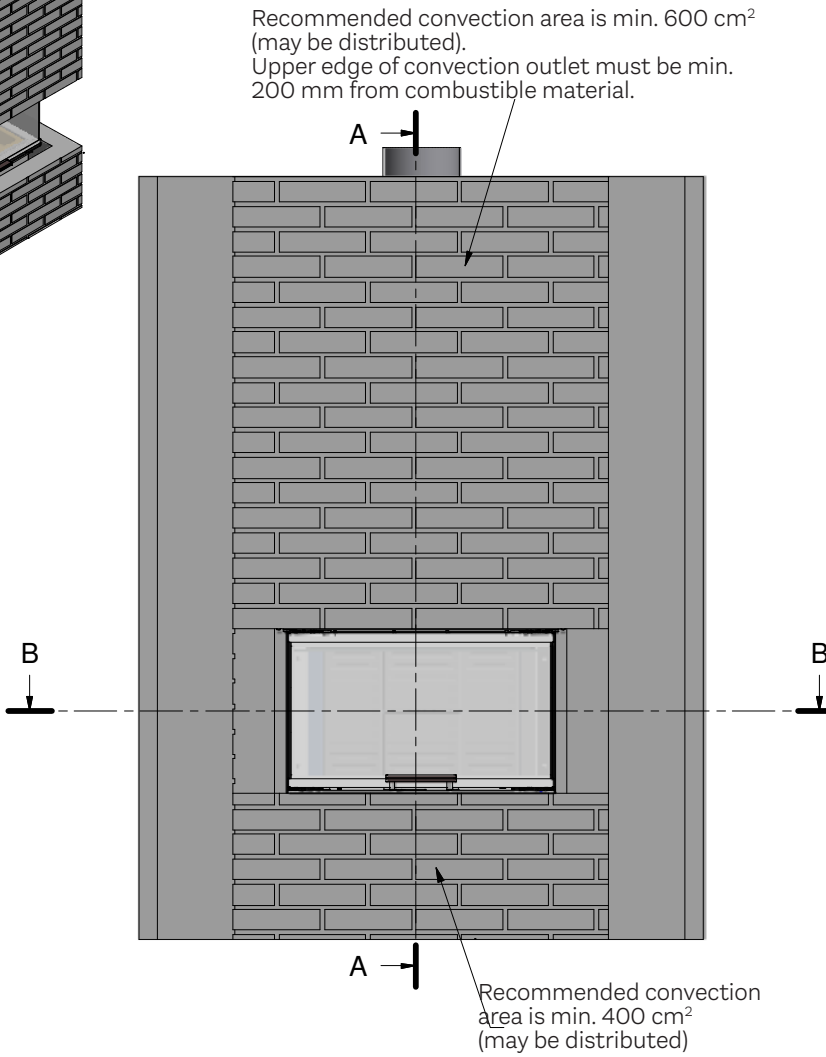

VISIO 3 - installation distances- brick wall

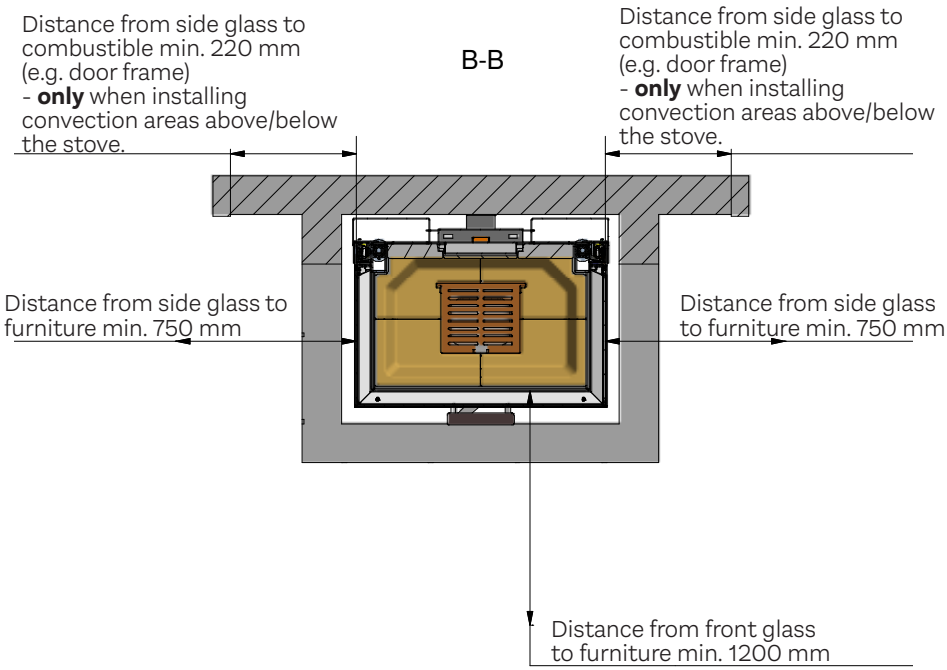

NOTE!

When installing without outer front cover (accessory) RAIS recommends an air gap of 5 mm between the bricks and the stove top (see VISIO 2).

Due to the stoves structure there will be air gaps of 34 mm to the sides and the bottom (see VISIO 2), which can be closed e.g. with non-combustible panels.

VISIO 3 - installation distances- brick wall

A-A

Clearance height above burning chamber min. 698 mm

200

Any convection area is placed just below the sloped plate.

Reflector plate

To guide the hot air out of the convection outlets, RAIS recommends to mount a sloped, non-combustible and insulating plate (Fermacell + mineral wool or similar) above the outlets. Fermacell is facing down.

Distance from reflector to non-combustible 0 mm (10 mm is recommended.

Installation height min. 385 mm

Construction of sloped plate.

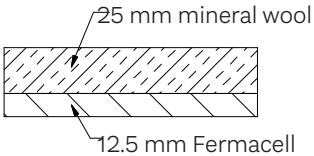

Air-system

When mounting the Air system ensure that the air control system provides fresh air from the outside.
In order for the Air system to function, you have to ensure in the structure that no vacuum occurs in the housing.

If convection grates are installed, be sure not to block them.

Air system (accessory) is connected to the bottom of the stove.

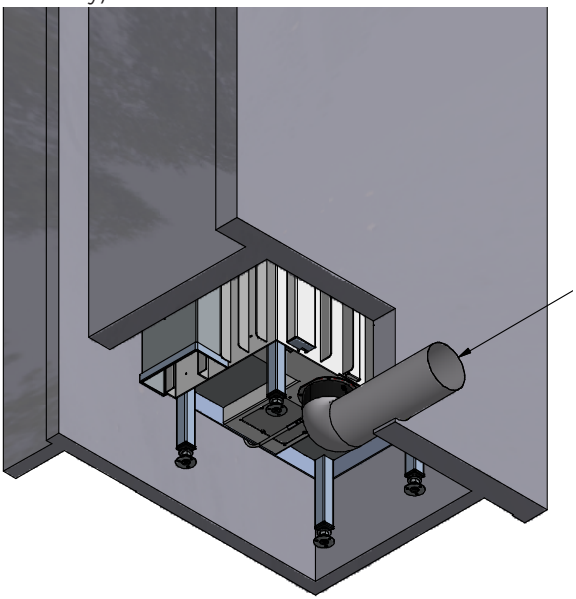

For the Installer

Finally before firing the stove for the first time a check should be made to ensure that the assembly and stove installation has been satisfactory and that there are no leaks in any seals in the appliance and appliance connections to the chimney.

Ensure that the appliance and chimney flue are functioning correctly before finally handing over to the user. If necessary read the later parts of this manual for guidance on care required when first lighting.

Inform the user that the appliance has been commissioned and ready to use and give instruction on the safe operation of the stove.

These Instructions must be left with the user and the user should be instructed to keep them in a safe place.

Operating instructions

Please note that HETAS Ltd Appliance Approval only covers the use of dry seasoned wood logs on this appliance. HETAS Ltd Approval does not cover the use of other fuels either alone or mixed with the wood logs, nor does it cover instructions for the use of other fuels.

Fuel

The stove has been tested in accordance with EN 13229:2001, EN 13229:2001/A1:2003, EN 13229:2001/A2:2004, and NS 3058 for stoking split, dried birchwood, and is
approved for broad-leaved/coniferous tree wood. The firewood must have a water content of 15-20% and its max. length should be 30 cm.

Stoking with wet firewood causes both soot, environmental pollution and bad fuel economy. Freshly cut wood contains approx. 60-70% water and is thoroughly unsuitable for stoking. Count min. 1-2 years of storage time for newly cut wood before using. Wood with a diameter of more than 100 mm should be split. Regardless of wood size, it should always have at least one surface area free of bark.

We do not recommend stoking with painted, laminated or impregnated wood, wood with a synthetic surface, painted refuse wood, chipboard, plywood, domestic waste, paper briquettes and pit coal, as this will produce malodorous smoke, which could be poisonous.

When firing with the above-mentioned items and amounts larger than those recommended, the stove is subjected to a larger amount of heat, which results in a higher chimney temperature and lower efficiency. This can result in the stove and chimney becoming damaged and would void the warranty.

The calorific value of the firewood is closely connected to the moisture level of the firewood. Moist firewood has a low heat value. The more water the wood contains, the more energy it takes for this water to vaporise, resulting in this energy being lost.

ONLY USE RECOMMENDED FUELS

The following table shows the calorific value of different types of wood, which have been stored for 2 years, and which have a residual moisture of 15-17%.

Wood	Kg dry wood pr. m^3	compared to beech/oak
Hornbeam	640	110%
Beech and oak	580	100%
Ash	570	98%
Maple	540	93%
Birch	510	88%
Mountain pine	480	83%
Fir	390	67%
Poplar	380	65%

1 kg of wood yields the same heat energy irrespective of wood type.
1 kg beech merely takes up less space than 1 kg of fir.

Drying and storage

Drying wood takes time. Proper air drying takes approx. 2 years.

Here are some tips:

- Store the wood sawn, split and stacked in an airy, sunny place, which is protected against rain (the south side of the house is particularly suitable).
- Store the firewood stacks at a hand's breadth apart, as this ensures that the air flowing through takes the moisture with it.
- Avoid covering the firewood stacks with plastic, as this prevents the moisture from escaping.
- It is a good idea to bring the firewood into the house 2-3 days before you need it.

Regulating the combustion air

The stoves are equipped with a one-handed operating lever for regulating the damper. The stove-specific regulating mechanisms can be seen on the diagrams (next section).

The primary air is added to the primary combustion zone at the bottom of the burning chamber, i.e. the bed of glowing embers. This cold air is only used in the lighting stage.

Secondary air is the air, added to the gas combustion zone, meaning air, which contributes to the combustion of the pyrolysis gasses (preheated air, used for cleaning the glass and combustion). This air is sucked through the damper and is pre-heated through the side and back channels and then emitted as hot scavenging air onto the glass. The hot air rinses the glass and keeps it soot-free.

Tertiary air at the back of the burning chamber at the top (row of holes) ensures the combustion of the final gas residues and particles before leaving through the chimney.

By setting the interval between position 1 and 2, the energy content in the firewood is used optimally, as there is oxygen for combustion and for the burning of the pyrolysis gasses. When the flames are a clear yellow the damper has been set correctly. Finding the correct position comes with time after regular use of the stove.

It is not recommended that you turn it down completely. A mistake commonly made is shutting the damper too early because it feels too hot. This results in dark smoke emanating from the chimney and the calorific value of the firewood is not being used to its fullest.

Room ventilation

There must not be an extractor fan fitted in the same room as the stove as this can cause the stove to emit smoke and fumes into the room.

The stove requires a permanent and adequate air supply in order for it to operate safely and efficiently.
In accordance with Building Regulations Approved Document J a permanent air supply vent is required into the room in which the stove is installed to provide combustion air.

This air vent should not under any circumstances be shut off or sealed.

Using the wood burning stove

Adjustment of the air damper - the damper has 3 settings

For reference see drawing (in the front of the manual).

Position 1

Pull the lever to the left.
The damper is almost closed; there is a minimal air intake. This position must be avoided during normal operation.
Notice warning in the next section.

Position 2

Pull the lever until first click (middle position).
This position gives only secondary air. During normal stoking the lever is set between position 1 and 2. When the flames are clear and yellow, the damper is set correctly, i.e. resulting in a slow/optimal burning.

Position 3

Pull the lever to the right.
The air damper is completely open and gives full ignition air (primary) and secondary air.
The position is for the lighting stage and refuelling and is not used under normal operation.

First usage

A careful start pays off. Start with a small fire, so that the wood burning stove can get accustomed to the high temperature. This gives the best start and any damage is avoided.

Be aware that a strange but harmless odour and smoke concoction may emanate from the surface of the stove, the first time you fire up. This is because the paint and materials need to harden. The odour disappears quickly, but you should check the ventilation and draught, if possible. See also, the IMPORTANT warning notice below about persistent fumes.
During this process you must be careful not to touch the visible surfaces/glass (very hot!), and it is recommended that you regularly open and close the door to prevent the door seal from sticking.

The stove may also produce “clicking noises” during heating and cooling, caused by the large temperature differences which the material is subjected to.

Never use any type of liquid fuel for kindling or maintaining the fire. There is a danger of explosion.

The stove gets very hot when in use always wear protective gloves when tending the stove.

If the stove has not been used for a while, follow the steps as if you were using it for the first time.

IMPORTANT - Warning Note!

Properly installed, operated and maintained this appliance will not emit fumes into the dwelling. Occasional fumes from de-ashing and re-fuelling may occur. However, persistent fume emission is potentially dangerous and must not be tolerated. If fume emission does persist, the following immediate actions should be taken:

1. Open doors and windows to ventilate room.
2. Let the fire out or eject and safely dispose of fuel from the appliance.
3. Check for flue or chimney blockage, and clean if required.
4. Do not attempt to relight the fire until the cause of the fume emission has been identified and corrected. If necessary seek expert advice.

IMPORTANT - Warning Note!

Do not use an aerosol spray on or near the stove when it is alight.

IMPORTANT - Safety advice!

When using the stove in situations where children, aged and/or infirm persons are present a fireguard must be used to prevent accidental contact with the stove. The fireguard should be manufactured in accordance with BS 8423:2002 (Replaces BS 6539).

Lighting and fuelling

NOTE!

If airsystem is connected, the valve must be open.

TIPS before firing up:

Open a door or window close to the wood burning. If there is a “storm” in the stove coming from the chimney, it is advisable to place a screwed-up piece of newspaper between the upper baffle plate and the chimney, set the paper on fire, and wait until you hear a “rumbling” noise in the chimney. This means that there definitely is a draught in the chimney and you avoid smoke in the room.

”Top-Down” lighting
For reference see photos (back of manual).

- Open the door fully until it is locked in the open position.
- Start by placing approx. 1kg of wood - 2 pcs. of wood - (photo 1) in the bottom of the combustion chamber. Place approx. 1.2 kilograms of dry firewood (photo 2), split into kindling sticks, and a couple of alcohol briquettes or similar.
- Light the fire (photo 3+4).
- Set the air damper to fully open pos. 3 (approx 15 min.), then at pos. 2.
- Close the door, leaving the door ajar approx 1-2 cm.

- When the fire has caught the kindling wood, close the door completely (photo 5) (after approx. 3-10 min., depending on the draft conditions in the chimney).
- When the last flames are extinguished and there is a nice layer of embers (photo 6), add 3-4 pieces wood - about 2-2½ kgs (photo 7).
- Close the door completely.
- If necessary set the air damper in position 3 (to the right) for 2-5 min. to start the fire (photo 8).
- Adjust the damper between pos. 1 and 2 (see 'Adjustment of air damper').

NOTE!

If the fire has burned down too low (too small an ember), it may take longer time to get the fire going again. In order to light up the fire, it is recommended to use kindling wood.

When firing the smoke out of the chimney should be almost invisible; just a 'flicker' in the air is opserved.

When refueling, open the door carefully to avoid smoke escaping. Never add wood while it is burning (flames!) in the stove.

RAIS recommends to refuel with 2-4 pieces wood - approx. 1½ - 2½ kg - within 49 minutes (intermittent operation).

ATTENTION!

Keep an eye on the stove when lighting.

During operation the door should always remain shut.

Be careful, as all external surfaces will be very hot to touch when in operation.

Control

Look for signs that indicates a correct firing in the stove:

- ash is white
- the walls in the combustion chambers are free from soot

Conclusion: the wood is sufficiently dry

Warning!!

If the firewood is only burning slowly without flames or is smoking, and too little air is added, unburned exhaust gasses are developed.
Exhaust gasses can be ignited and explode, leading to damage to material and possibly personal injury.
Never close the air supply completely when lighting a fire in the stove.

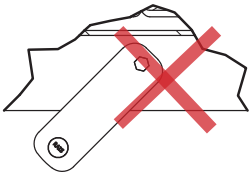

Sample photos

If there are only a few embers remaining you must light the fire again.

If you just add firewood the fire will not be lit, but unburned exhaust gasses will develop.

Here firewood has been added to an ember layer which is too small, and the air flow is too small - smoke is developed.

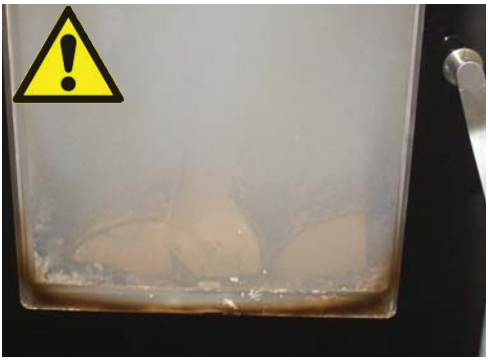

Avoid heavy smoke - danger of exhaust gas explosion.

In case of very heavy smoke, open the damper and the door and light the fire again.

Cleaning and care

Glass

Most woodstoves use a ceramic glass product which is resistant to heat but requires cleaning to keep its appearance.
Soot or opaque marks can easily cleaned if the marks are fresh, however If you leave the glass dirty for any length of time the acid from the wood can etch the surface of the glass permantley (wet unseasoned wood, soft wood such as used in the building industry, pallet wood should be avoided).
Only clean when cold.

Use only stove glass cleaners to remove heavy tar/ soot deposits.
All other marks can normally be removed with a damp cloth, then dry with a clean cloth or newspaper, do not let the glass dry before applying a dry clean cloth.
With more stubborn marks i.e. opaque areas/frosting, you need put a small amount of wood ash on a clean damp cloth. If the opaque mark/frosting doesn't come out, contact your dealer for a special remover.

Paint finish

The appliance has been coated with a high temperature paint which can last for years. Do not clean with a damp cloth or any cleaning products as they can cause rust or discolouration. Only clean when cold use a brush with soft bristles or dust with a lint free cloth.
Only re-spray when necessary.

The wood burning stove and the chimney must be serviced by a chimney sweep twice a year. During cleaning and care, the stove must be cold.

Prolonged period of non-use:

If the stove is to be left unused for a prolonged period of time then it should be given a thorough clean to remove ash and unburned fuel residues. To enable a good flow of air through the appliance to reduce condensation and subsequent damage, leave the air controls fully open.

Prior to a new heating season, it should be checked that the chimney and smoke gas connector are not blocked.

Maintenance/spare parts

Especially movable parts wear down during frequent use. Door seals are also wear parts. Only use original spare parts. We recommend service performed by your dealer after completion of a heating period.

Combustion chamber lining

The combustion chamber lining protects the body of the wood-burning stove against the heat from the fire. The large temperature fluctuations may result in cracks in the plates of the combustion chamber lining, which however have no effect on the functional capacity of the wood-burning stove. They do not have to be replaced unless they are crumbling away due to many years of use. The plates of the combustion chamber lining are only inserted and are easy to replace by your dealer or yourself.

Movable parts

Door hinges and door locks must be lubricated as required. We recommend that only our own lubricating spray is used, as the use of other products may lead to the formation of odours and residues. Contact your dealer to obtain the lubricating spray.

Cleaning the door glass - VISIO 1

Lock the door before cleaning.
using the special key (supplied with the stove) wrench the lock above the glass.

With a light push on the handle, the door comes out.

after cleaning close the door, and wrench the lock back in place.

Cleaning the door glass - VISIO 2

Lock the door before cleaning,
Using the special key (supplied with the stove) wrench the 2 locks above the glass.

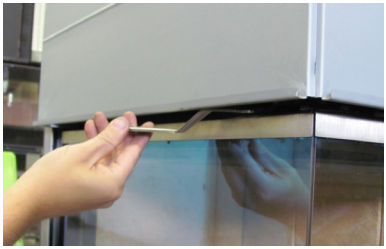

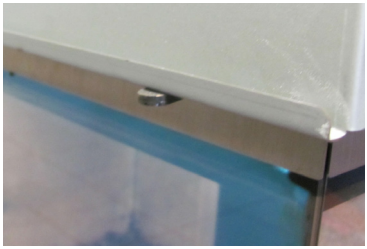

The front glass is released by wrenching the bracket below and above the side glass.

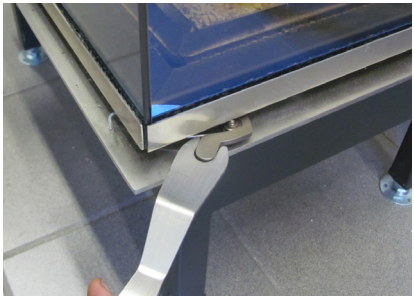

Pull the front glass and clean the inside.

Lock the front glass and release the door i reverse order.

Cleaning the door glass - VISIO 3

Lock the door before cleaning. Using the special key (supplied with the stove) wrench the 2 locks (1 on each side) above the glass.

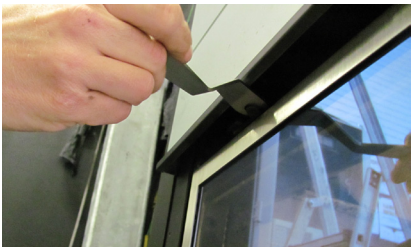

The side glass is released by wrenching the bracket below and above the side glass.

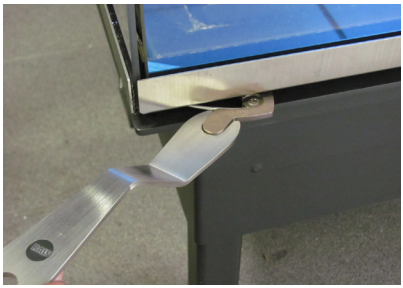

Pull the side glass and clean the inside of the glasses.

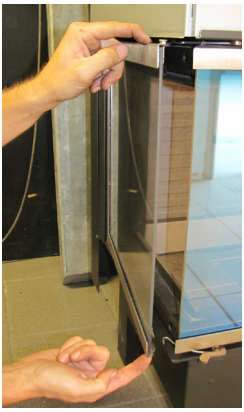

Lock the side glass and release the door i reverse order.
Repeat the procedure on the opposite side glass.

Cleaning the combustion chamber

Scrape/shovel the ash through the grate in the middle of the stove. The ash tray below is removed and emptied into a non combustible container until it has cooled.
You can dispose of ash with your normal household waste.

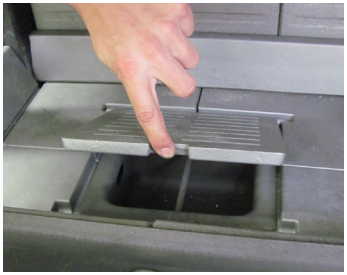

REMEMBER!

- never remove all the ashes from the combustion chamber
- the wood will burn at its best with a layer of ashes of approx. 2 cm.

Cleaning of flue ways

In order to gain access to the smoke flue, remove the upper plate – baffle plate made of vermiculite and the smoke chicane (steel plate).

Carefully remove the baffle plate by pushing the back side upwards.

Then, lower the front edge and carefully pull out the plate.

The smoke chicane rests on 2 channels.
push it forwards, tilt, lower and remove.

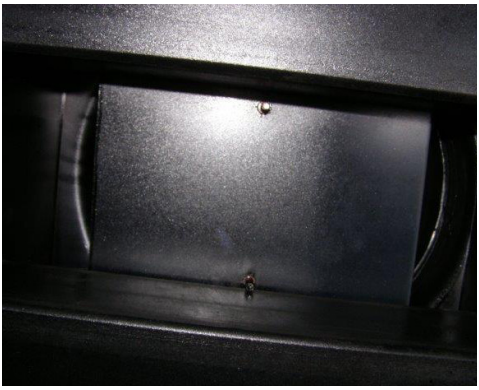

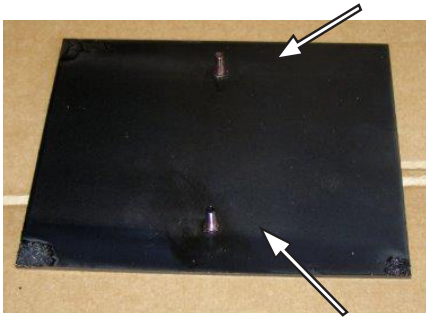

Remove dirt and dust, and mount the parts in reverse order.

When remounting the chicane, secure the plate under locking plate.

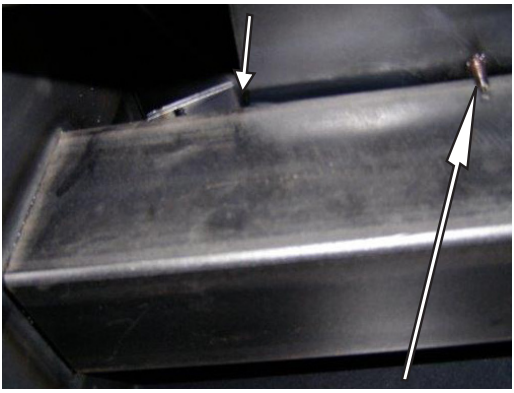

Note that the pins are pointing downwards.

NOTE!
Be careful when replacing the baffle plate and smoke chicane.

Interruption of operation

Smoke spillage around door

could be due to too low draught in the chimney <12Pa

- check whether the flue or chimney is blocked
- check whether the extraction hood is switched on; if it is, switch it off and open a window/door in the proximity of the stove for a short while.

Soot on glass

could be caused by

- the firewood is closed.
- the air damper is closed

Make sure that the stove is heated properly when firing up, prior to closing the door.

Stove is burning too strong

could be caused by:

- leak around the door seal
- chimney draught too large >22 Pa, draught control regulator should be installed.

Stove is burning too weakly

could be caused by:

- too small amount firewood
- too little air supply for room ventilation
- unclean smoke channels
- leaky chimney
- leakage between chimney and flue

Low draught in chimney

could be caused by

- temperature difference is to small, e.g. due to poorely insulated fluepipe
- outdoor temperature is high e.g.in the summer
- no wind
- chimney is too short or is on the lee side
- false air draught in chimney
- chimney or flue pipe is blocked
- high-density housing (lack of fresh air intake)
- negative smoke draught (poor condition)

In case of cold chimney or difficult weather conditions you can compensate by adding more fresh air (open the damper) to the stove than usual.

If your stove continues to malfunction, we recommend that you contact your RAIS distributor or chimney sweep.

WARNING!

If incorrectly or too damp firewood is used, it can lead to excessive formation of soot in the chimney and possible a chimney fire:

- in this case shut off all air supply from outside (if installed) to the stove
- contact the fire department
- **never** attempt to put out fire with water!
- afterwards, you should ask your chimney sweeper to check the stove and chimney

IMPORTANT!

- to ensure safe burning there must be clear yellow flames or clear embers at all times.
- the firewood should not be smouldering.

If the firewood is only burning slowly without flames or is smoking, and too little air is added, unburned exhaust gasses are developed.
Exhaust gasses can be ignited and explode, leading to damage to material and possibly personal injury.

Never close the air supply completely when lighting a fire.in the stove.

Rebuilding to a self-closing door before, the oven is built in.

The door is made self-closing by dismantling some of the door's counterweights. On the VISIO 1 & 3, the counterweights must be changed on both sides.

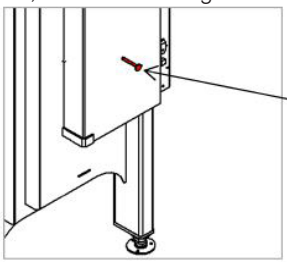

1. Remove the transport lock and the screws on the counter-weight cover

Transport lock.

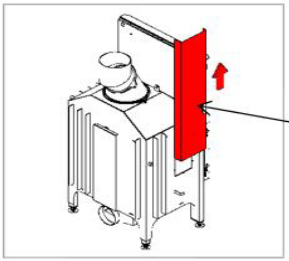

2. Remove the counterweight cover by pulling it up.

Counterweight cover.

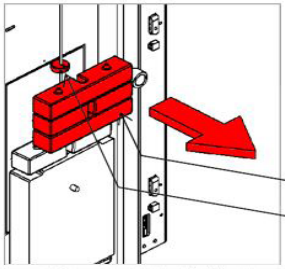

3. Remove the retaining ring (Allen key 2.5mm). Remove the required number of counterweights, so that the door closes slowly and at a constant speed. Check its operation.

Counterweights

Retaining ring

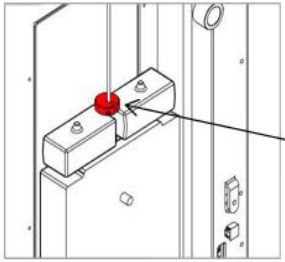

4. Tighten the retaining ring (Allen key 2.5mm).

Retaining ring

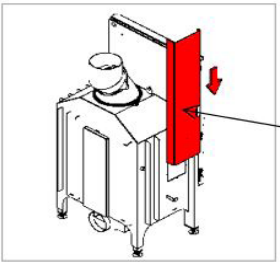

5. Attach the counterweight cover and screw in the screw(s).

Counterweight cover.

Rebuilding to self-closing door after, the oven has been built in.

The door is made self-closing by dismantling some of the door's counterweights. On the VISIO 1 & 3, the counterweights must be changed on both sides.

1. Remove the Side Skamol sheet.

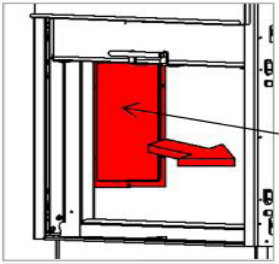

2. Remove the access panel.

Access panel.

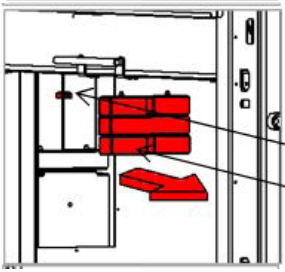

3. Unscrew the retaining ring (Allen key 2.5mm). Remove the required number of counterweights, so that the door closes slowly and at a constant speed. Check its operation.

Retaining ring.

Counterweights.

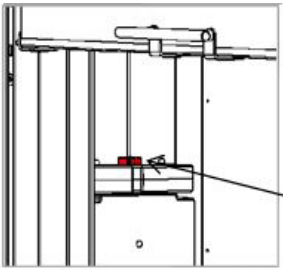

4. Tighten the retaining ring (Allen key 2.5mm).

Retaining ring.

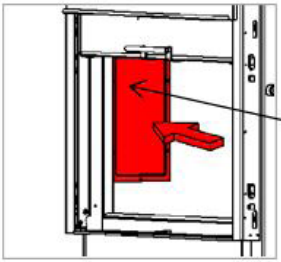

5. Refit the access panel and side Skamol sheet.

Access panel.

Accessories

Front cover VISIO 1
4 sided - 6 mm thick

124141080 - stainless steel
124141090 - black

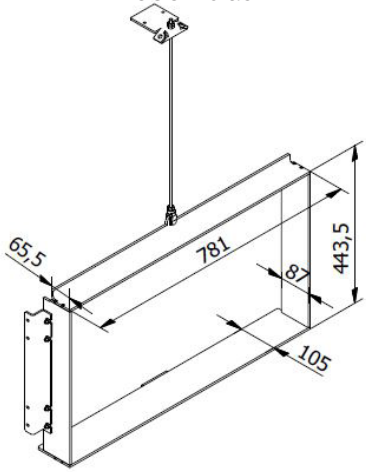

Front cover for VISIO 2
6 sided - left side - 6 mm thick

124142080 - stainless steel
124142090 - black

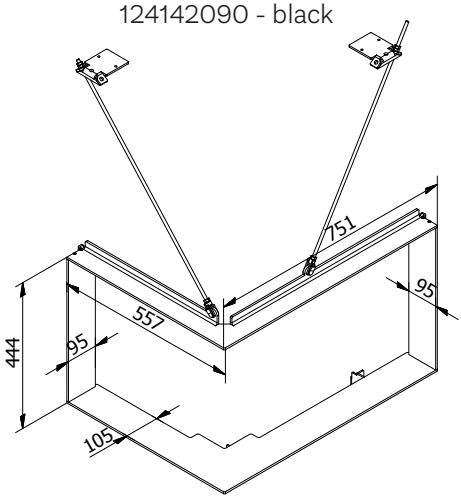

Front cover for VISIO 2
6 sided - right side - 6 mm thick

124143080 - stainless steel
124143090 - black

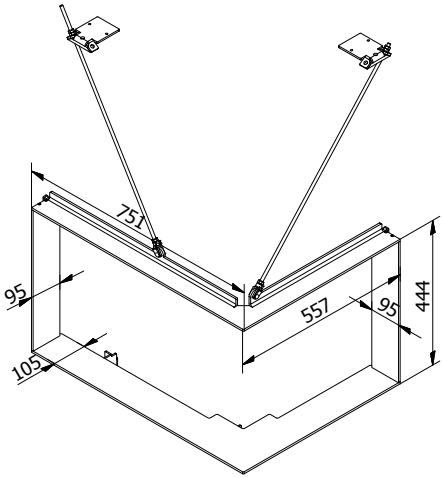

Front cover for VISIO 3
8 sided - 6 mm thick

124144080 - stainless steel
124144090 - black

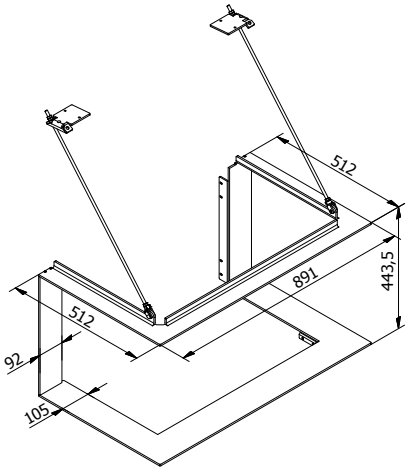

Air kit no. 31
(floor)

00065173190

Convection grates - front

511480470 - white
511480490 - black

511480870 - white
511480890 - black

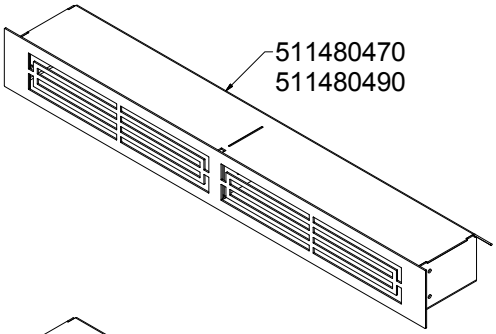

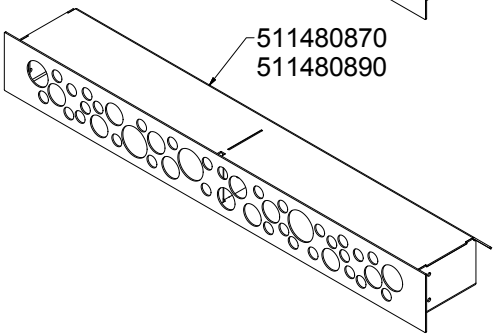

Convection grates - side

836480470 - white
836480490 - black

836480870 - white
836480890 - black

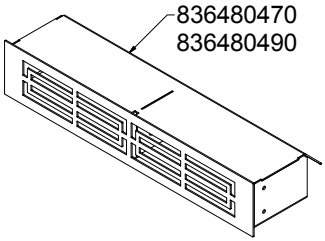

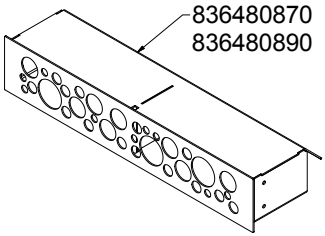

Heat storage stone Visio

42 kg
1247001

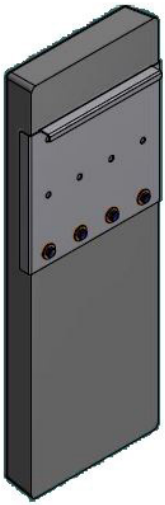

Heat storage stone Visio

70 kg
1247002

Spare parts VISIO 1

Pos.	Quantity	Part no.	Description
1	1	1240905mon	Handle for air damper complete
2	1	1240990	Air damper complete
3	1	1251015mon	Door handle
4	1	1242410	Cold hand – Kalte hand complete
5	1	124105090	Glass frames painted Visio 1
		124105080	Glass frames SST Visio 1
6	1	1245006	Door glass front
7	1	1242251	Schamotte Visio 1 right/left
8	1	1242250	Wall skamol Visio 1 right/left

Spare parts VISIO 2

Pos.	Quantity	Part no.	Description
1	1	1240905mon	Handle for air damper complete
2	1	1240990	Air damper complete
3	1	1241015mon	Door handle
4	1	1242410	Cold hand – Kalte hand complete
5	1	124205090	Glass frames painted Visio 2L
		124205080	Glass frames SST Visio 2L
6	1	124305090	Glass frames painted Visio 2R
	1	124305080	Glass frame SST Visio 2R
7	1	1245004	Door glass front
8	1	1245005	Door glass side
9	1	1242221	Schamotte Visio 2 right/left
10	1	1242220	Wall skamol Visio 2 right/left

Spare parts VISIO 3

Pos.	Quantity	Part no.	Description
1	1	1240905mon	Handle for air damper complete
2	1	1240990	Air damper complete
3	1	1241015mon	Door handle
4	1	1242410	Cold hand – Kalte hand complete
5	1	124405090	Glass frames painted Visio 3
		124405080	Glass frames SST Visio 3
6	1	1245001	Door glass front
7	2	1245002	Door glass side
8	1	1242241	Schamotte Visio 3
9	1	1242240	Wall skamol Visio 3

If spare parts other than those recommended by RAIS are used, the warranty is voided.
All replaceable parts can be bought as spare parts from your RAIS distributor.
For reference see spare parts drawing (front of manual).

UK DECLARATION OF PERFORMANCE

Regulation (EU) 305/2011 No. 0001 — CPR-2013/07/01

No.: 124

1.	**Unique identification code of the product-type**	RAIS Visio 1, RAIS Visio 2, RAIS Visio 3 Attika Visio 1, Attika Visio 2, Attika Visio 3
2.	**Type**	Inset appliance burning solid fuel without hot water supply
3.	**Intended use**	Domestic room heater
4.	**Manufacturer**	Spartherm Feuerungstechnik GmbH, Maschweg 38, D-49324 Melle, www.spartherm.com
5.	**Authorised representative**	RAIS A/S, Industrivej 20, Vangen, DK-9900 Frederikshavn, Dänemark, www.rais.com / www.attika.ch
6.	**System of assessment AVCP**	System 3
7.	**Notified body**	The notified laboratory *Danish Technological Institute - Identification no. 1235 Teknologiparken, Kongsvang Allé 29, DK-8000 Århus C* performed the determination of the product type on the basis of type testing under system 3 and issued test report a. 300-ELAB-2080-EN
8.	**Declared performance**	Harmonized technical specification: EN 13229:2001/A2:2004/AC:2007

Essential characteristics		Performance		
Fire safety		• Insulated flue • 50 mm Skamotec 225 non-combustible panel board Distances are measured externally on the built-in box		
Reaction to fire	A1	**Visio 1**	**Visio 2**	**Visio 3**
Distance to combustible materials Minimum distances [mm] *For other installation or wall settings see instruction manual*	rear	0	0	0
	sides	167,5	0	-
	ceiling	735,5	735,5	735,5
	furniture distance from door	1400	1200	1200
	furnishing distance from side glass	-	850	750
	Floor	385	385	385
Risk of burning fuel falling out	Pass			
OGC (mg/Nm³ rel. 13 Vol-% O_2)	45			
CO-emission of combustion products	0,092 % / 1150 mg/Nm³			
NO_X (mg/Nm³ rel. 13 Vol-% O_2)	81			
Dust mg/Nm³ at (rel. 13 Vol-% O_2)	5			
Surface temperature	Pass			
Electrical safety	NPD			
Cleanability	Pass			
Maximum operating pressure	- bar			
Flue gas temperature T at nominal heat output	243 °C			
Mechanical resistance (to carry a chimney/flue)	NPD			
Thermal output				
Nominal heat output	7 kW			
Room heating output	7 kW			
Water heating output	- kW			
Energy efficiency η	80 %			
Seasonal Efficiency $\eta S,on$	70 %			

9. The performance of the product identified in points 1 and 2 is in conformity with the declared performance in point 8. This declaration of performance is issued under the sole responsibility of the manufacturer identified in point 4.

Signed for and on behalf of the manufacturer by: John Engell Nielsen, R&D Manager

Place FREDERIKSHAVN, DENMARK

Date 14-09-2022

Signature

ATTIKA FEUER AG
Brunnmatt 16
CH-6330 Cham
Switzerland
www.attika.ch

RAIS A/S
Industrivej 20
DK-9900 Frederik-
shavn
Denmark
www.rais.com